University of Wollongong
Research Online

Faculty of Informatics - Papers (Archive)

Faculty of Engineering and Information Sciences

2011

T-S fuzzy H tracking control of input delayed robotic manipulators

Haiping Du
University of Wollongong, hdu@uow.edu.au

Weihua Li
University of Wollongong, weihuali@uow.edu.au

Publication Details

H. Du & W. Li, "T-S fuzzy H tracking control of input delayed robotic manipulators," in Time-Delay Systems, D. Lj. Debeljkovic, Ed. Austria: InTech, 2011, pp.211-226.

Research Online is the open access institutional repository for the University of Wollongong. For further information contact the UOW Library: research-pubs@uow.edu.au

T-S fuzzy H tracking control of input delayed robotic manipulators

Abstract
Time delays are often encountered by practical control systems while they are acquiring, processing, communicating, and sending signals. Time delays may affect the system stability and degrade the control system performance if they are not properly dealt with. Taking the classical robot control problem as an example, the significant effect of time delay on the closed-loop system stability has been highlighted in the bilateral teleoperation, where the communication delay transmitted through a network medium has been received widespread attention and different approaches have been proposed to address this problem (Hokayem and Spong, 2006). In addition, examples like processing delays in visual systems and communication delay between different computers on a single humanoid robot are also main sources that may cause time delays in a robotic control system (Chopra, 2009), and the issue of time delay for robotic systems has been studied through the passivity property. For systems with time delays, both delay dependent and delay independent control strategies have been extensively studied in recent years, see for example (Xu and Lam, 2008) and references therein. For the control of nonlinear time delay systems, model based Takagi-Sugeno (T-S) fuzzy control (Tanaka and Wang, 2001; Feng, 2006; Lin et al., 2007) is regarded as one of the most effective approach because some of linear control theory can be applied directly. Conditions for designing such kinds of controllers are generally expressed as linear matrix inequalities (LMIs) which can be efficiently solved by using most available software like Matlab LMI Toolbox, or bilinear matrix inequalities (BMIs) which could be transferred to LMIs by using algorithms like iteration algorithm or cone complementary linearisation algorithm. From the theoretical point of view, one of the current focus on the control of time delay systems is to develop less conservative approaches so that the controller can stabilise the systems or can achieve the defined control performance under bigger time delays

Keywords
control, tracking, h, manipulators, robotic, fuzzy, delayed, t, input

Disciplines
Physical Sciences and Mathematics

Publication Details
H. Du & W. Li, "T-S fuzzy H tracking control of input delayed robotic manipulators," in Time-Delay Systems, D. Lj. Debeljkovic, Ed. Austria: InTech, 2011, pp.211-226.

This book chapter is available at Research Online: http://ro.uow.edu.au/infopapers/1933

11

T-S Fuzzy H_∞ Tracking Control of Input Delayed Robotic Manipulators

Haiping Du[1] and Weihua Li[2]
[1]*School of Electrical, Computer and Telecommunications Engineering*
[2]*School of Mechanical, Materials and Mechatronics Engineering*
University of Wollongong, Wollongong, NSW 2522
Australia

1. Introduction

Time delays are often encountered by practical control systems while they are acquiring, processing, communicating, and sending signals. Time delays may affect the system stability and degrade the control system performance if they are not properly dealt with. Taking the classical robot control problem as an example, the significant effect of time delay on the closed-loop system stability has been highlighted in the bilateral teleoperation, where the communication delay transmitted through a network medium has been received widespread attention and different approaches have been proposed to address this problem (Hokayem and Spong, 2006). In addition, examples like processing delays in visual systems and communication delay between different computers on a single humanoid robot are also main sources that may cause time delays in a robotic control system (Chopra, 2009), and the issue of time delay for robotic systems has been studied through the passivity property.

For systems with time delays, both delay dependent and delay independent control strategies have been extensively studied in recent years, see for example (Xu and Lam, 2008) and references therein. For the control of nonlinear time delay systems, model based Takagi-Sugeno (T-S) fuzzy control (Tanaka and Wang, 2001; Feng, 2006; Lin et al., 2007) is regarded as one of the most effective approach because some of linear control theory can be applied directly. Conditions for designing such kinds of controllers are generally expressed as linear matrix inequalities (LMIs) which can be efficiently solved by using most available software like Matlab LMI Toolbox, or bilinear matrix inequalities (BMIs) which could be transferred to LMIs by using algorithms like iteration algorithm or cone complementary linearisation algorithm. From the theoretical point of view, one of the current focus on the control of time delay systems is to develop less conservative approaches so that the controller can stabilise the systems or can achieve the defined control performance under bigger time delays (Chen et al., 2009; Liu et al., 2010).

Tracking control of robotic manipulators is another important topic which receives considerable attention due to its significant applications. Over the decades, various approaches in tracking control of nonlinear systems have been investigated, such as adaptive control approach, variable structure approach, and feedback linearisation approach, etc. Fuzzy control technique through T-S fuzzy model approach is also one

effective approach in tracking control of nonlinear systems (Ma and Sun, 2000; Tong et al., 2002; Lin et al., 2006), and in particular, for robotic systems (Tseng et al., 2001; Begovich et al., 2002; Ho et al., 2007).

In spite of the significance on tracking control of robotic systems with input time delays, few studies have been found in the literature up to the date. This chapter attempts to propose an H_∞ controller design approach for tracking control of robotic manipulators with input delays. As a robotic manipulator is a highly nonlinear system, to design a controller such that the tracking performance in the sense of H_∞ norm can be achieved with existing input time delays, the T-S fuzzy control strategy is applied. Firstly, the nonlinear robotic manipulator model is represented by a T-S fuzzy model. And then, sufficient conditions for designing such a controller are derived with taking advantage of the recently proposed method (Li and Liu, 2009) in constructing a Lyapunov-Krasovskii functional and using a tighter bounding technology for cross terms and the free weighting matrix approach to reduce the issue of conservatism. The control objective is to stabilise the control system and to minimise the H_∞ tracking performance, which is related to the output tracking error for all bounded reference inputs, subject to input time delays. With appropriate derivation, all the required conditions are expressed as LMIs. Finally, simulation results on a two-link manipulator are used to validate the effectiveness of the proposed approach. The main contributions of this chapter are: 1) to propose an effective controller design method for tracking control of robotic manipulator with input time delays; 2) to apply advanced techniques in deriving less conservative conditions for designing the required controller; 3) to derive the conditions properly so that they can be expressed as LMIs and can be solved efficiently.

This chapter is organised as follows. In section 2, the problem formulation and some preliminaries on manipulator model, T-S fuzzy model, and tracking control problem are introduced. The conditions for designing a fuzzy H_∞ tracking controller are derived in section 3. In section 4, the simulation results on stability control and tracking control of a nonlinear two-link robotic manipulator are discussed. Finally, conclusions are summarised in section 5.

The notation used throughout the paper is fairly standard. For a real symmetric matrix W, the notation of $W > 0$ ($W < 0$) is used to denote its positive- (negative-) definiteness. $\|.\|$ refers to either the Euclidean vector norm or the induced matrix 2-norm. I is used to denote the identity matrix of appropriate dimensions. To simplify notation, * is used to represent a block matrix which is readily inferred by symmetry.

2. Preliminaries and problem statement

2.1 Manipulator dynamics model

To simplify the problem formulation, a two-link robot manipulator as shown in Fig. 1 is considered.

The dynamic equation of the two-link robot manipulator is expressed as (Tseng, Chen and Uang, 2001)

$$M(q)\ddot{q}+V(q,\dot{q})\dot{q}+G(q)=u \tag{1}$$

where

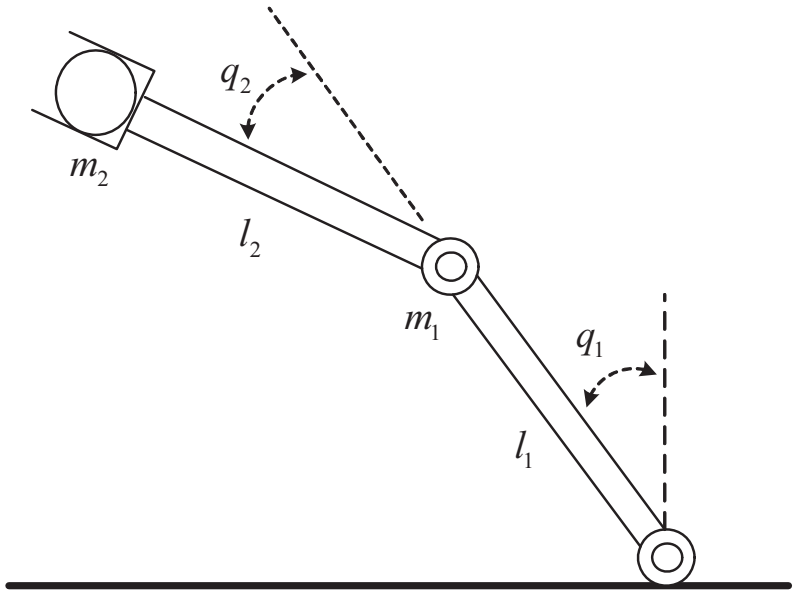

Fig. 1. Two-link robotic manipulator.

$$M(q)=\begin{bmatrix} (m_1+m_2)l_1^2 & m_1l_1l_2(s_1s_2+c_1c_2) \\ m_2l_1l_2(s_1s_2+c_1c_2) & m_2l_2^2 \end{bmatrix}$$

$$V(q,\dot{q})=m_2l_1l_2(c_1c_2-s_1c_2)\begin{bmatrix} 0 & -\dot{q}_2 \\ -\dot{q}_1 & 0 \end{bmatrix}$$

$$G(q)=\begin{bmatrix} -(m_1+m_2)l_1gs_1 \\ -m_2l_2gs_2 \end{bmatrix}$$

and $q=[q_1,q_2]^T$ and $u=[u_1,u_2]^T$ denote the generalised coordinates (radians) and the control torques (N-m), respectively. M(q) is the moment of inertia, $V(q,\dot{q})$ is the centripetal-Coriolis matrix, and G(q) is the gravitational vector. m_1 and m_2 (in kilograms) are link masses, l_1 and l_2 (in meters) are link lengths, g=9.8 (m/s^2) is the acceleration due to gravity, and $s_1=\sin(q_1)$, $s_2=\sin(q_2)$, $c_1=\cos(q_1)$, and $c_2=\cos(q_2)$. After defining $x_1=q_1$, $x_2=\dot{q}_1$, $x_3=q_2$, and $x_4=\dot{q}_2$, equation (1) can be rearranged as

$$\begin{aligned} \dot{x}_1&=x_2+w_1 \\ \dot{x}_2&=f_1(x)+g_{11}(x)u_1+g_{12}(x)u_2+w_2 \\ \dot{x}_3&=x_4+w_3 \\ \dot{x}_4&=f_2(x)+g_{21}(x)u_1+g_{22}(x)u_2+w_4 \end{aligned} \tag{2}$$

where w_1, w_2, w_3, w_4 denote external disturbances, and

$$f_1(x)=\frac{(s_1c_2-c_1s_2)}{l_1l_2[(m_1+m_2)-m_2(s_1s_2+c_1c_2)^2][m_2l_1l_2[(s_1s_2+c_1c_2)x_2^2-m_2l_2^2x_4^2]}$$
$$+\frac{1}{l_1l_2[(m_1+m_2)-m_2(s_1s_2+c_1c_2)^2][(m_1+m_2)l_2gs_1-m_2l_2gs_2(s_1s_2+c_1c_2)]}$$

$$f_2(x)=\frac{(s_1c_2-c_1s_2)}{l_1l_2[(m_1+m_2)-m_2(s_1s_2+c_1c_2)^2][-(m_1+m_2)l_1^2x_2^2+m_2l_1l_2(s_1s_2+c_1c_2)x_4^2]}$$
$$+\frac{1}{l_1l_2[(m_1+m_2)-m_2(s_1s_2+c_1c_2)^2][-(m_1+m_2)l_1gs_1(s_1s_2+c_1c_2)+(m_1+m_2)l_1gs_2]}$$
$$g_{11}(x)=\frac{m_2l_2^2}{m_2l_1^2l_2^2[(m_1+m_2)-m_2(s_1s_2+c_1c_2)^2]}$$
$$g_{12}(x)=\frac{-m_2l_1l_2(s_1s_2+c_1c_2)}{m_2l_1^2l_2^2[(m_1+m_2)-m_2(s_1s_2+c_1c_2)^2]}$$
$$g_{21}(x)=\frac{-m_2l_1l_2(s_1s_2+c_1c_2)}{m_2l_1^2l_2^2[(m_1+m_2)-m_2(s_1s_2+c_1c_2)^2]}$$
$$g_{22}(x)=\frac{(m_1+m_2)l_1^2}{m_2l_1^2l_2^2[(m_1+m_2)-m_2(s_1s_2+c_1c_2)^2]}$$

Note that the time variable t is omitted in the above equations for brevity.

2.2 T-S fuzzy model

The above described robotic manipulator is a nonlinear system. To deal with the controller design problem for the nonlinear system, the T-S fuzzy model is employed to represent the nonlinear system with input delays as follows:

Plant rule i

IF $\theta_1(t)$ is N_{i1} , …, $\theta_p(t)$ is N_{ip} THEN

$$\begin{aligned}&\dot{x}(t)=A_ix(t)+B_iu(t-\tau)+Ew(t)\\&y(t)=Cx(t)\\&x(0)=x_0,u(t)=\varphi(t),t\in[-\bar{\tau},0],i=1,2,...,k\end{aligned}\tag{3}$$

where N_{ij} is a fuzzy set, $\theta(t)=[\theta_1(t),...,\theta_p(t)]^T$ are the premise variables, x(t) is the state vector, and w(t) is external disturbance vector, A_i and B_i are constant matrices. Scalar k is the number of IF-THEN rules. It is assumed that the premise control variables do not depend on the input u(t). The input delay τ is an unknown constant time-delay, and the constant $\bar{\tau}>0$ is an upper bound of τ .

Given a pair of (x(t),u(t)), the final output of the fuzzy system is inferred as follows

$$\begin{aligned}&\dot{x}(t)=\sum_{i=1}^{k}h_i(\theta(t))(A_ix(t)+B_iu(t-\tau)+Ew(t))\\&y(t)=Cx(t)\\&x(0)=x_0,u(t)=\varphi(t),t\in[-\bar{\tau},0]\end{aligned}\tag{4}$$

where $h_i(\theta(t))=\frac{\mu_i(\theta(t))}{\sum_{i=1}^{k}\mu_i(t))}$, $\mu_i(\theta_j(t))=\prod_{j=1}^{p}N_{ij}(\theta_j(t))$ and $N_{ij}(\theta_j(t))$ is the degree of the membership of $\theta_j(t)$ in N_{ij}. In this paper, we assume that $\mu_i(\theta_j(t))\geq 0$ for i=1,2,…,k and $\sum_{i=1}^{k}\mu_i(\theta(t))>0$ for all t. Therefore, $h_i(\theta(t))\geq 0$ for i=1,2,…,k, and $\sum_{i=1}^{k}h_i(\theta(t))=1$.

2.1 Tracking control problem

Consider a reference model as follows

$$\begin{aligned}\dot{x}_r(t)&=A_r x_r(t)+r(t)\\ y_r(t)&=C_r x_r(t)\end{aligned} \tag{5}$$

where $x_r(t)$ and $r(t)$ are reference state and energy-bounded reference input vectors, respectively, A_r and C_r are appropriately dimensioned constant matrices. It is assumed that both $x(t)$ and $x_r(t)$ are online measurable.

For system model (3) and reference model (5), based on the parallel distributed compensation (PDC) strategy, the following fuzzy control law is employed to deal with the output tracking control problem via state feedback.

Control rule

IF $\theta_1(t)$ is N_{i1} , …, $\theta_p(t)$ is N_{ip} THEN

$$u(t)=K_{1i}x(t)+K_{2i}x_r(t),\ i=1,2,...,k \tag{6}$$

Hence, the overall fuzzy control law is represented by

$$u(t)=\sum_{i=1}^{k}h_i(\theta(t))[K_{1i}x(t)+K_{2i}x_r(t)]=\sum_{i=1}^{k}h_i(\theta(t))K_i\bar{x}(t) \tag{7}$$

where K_{1i}, and K_{2i}, i=1,2,…,k, are the local control gains, and $K_i=[K_{1i},\ K_{2i}]$ and $\bar{x}(t)=[x^T(t),x_r^T(t)]^T$. When there exists an input delay τ, we have that $u(t-\tau)=\sum_{i=1}^{k}h_i(\theta(t-\tau))[K_{1i}x(t-\tau)+K_{2i}x_r(t-\tau)]$, so, it is natural and necessary to make an assumption that the functions $h_i(\theta(t))$, i=1,2,… ,k, are well defined for all $t\in[-\tau,0]$, and satisfy the following properties $h_i(\theta(t-\tau))\geq 0$ for i=1,2,…,k and $\sum_{i=1}^{k}h_i(\theta(t-\tau))=1$. For convenience, let $h_i=h_i(\theta(t))$, $h_i(\tau)=h_i(\theta(t-\tau))$, $x(\tau)=x(t-\tau)$, and $u(\tau)=u(t-\tau)$. From here, unless confusion arises, time variable t will be omitted again for notational convenience.

With the control law (7), the augmented closed-loop system can be expressed as follows

$$\begin{aligned}\dot{\bar{x}}&=\sum_{i,j=1}^{k}h_ih_j(\tau)[\bar{A}_i\bar{x}+\bar{B}_{ij}\bar{x}(\tau)+\bar{E}\bar{v}]\\ e&=\bar{C}\bar{x}\end{aligned} \tag{8}$$

where

$$\bar{A}_i=\begin{bmatrix}A_i & 0\\ 0 & A_r\end{bmatrix},\bar{B}_{ij}=\begin{bmatrix}B_iK_{1j} & B_iK_{2j}\\ 0 & 0\end{bmatrix}=\begin{bmatrix}B_i\\ 0\end{bmatrix}[K_{1j}\quad K_{2j}]=\hat{B}_iK_j,\bar{E}=\begin{bmatrix}E & 0\\ 0 & I\end{bmatrix},\bar{C}=\begin{bmatrix}C & -C_r\end{bmatrix},\bar{v}=\begin{bmatrix}w\\ r\end{bmatrix},e=y-y_r\ .$$

The tracking requirements are expressed as follows

1. The augmented closed-loop system in (8) with $\bar{v}=0$ is asymptotically stable;
2. The H_∞ tracking performance related to tracking error e is attenuated below a desired level, i.e., it is required that

$$\|e\|_2 < \gamma \|\bar{v}\|_2 \tag{9}$$

for all nonzero $\bar{v} \in L_2[0,\infty)$ under zero initial condition, where $\gamma>0$.
Our purpose is to find the feedback gains K_i (i=1,2,…,k) such that the above mentioned two requirements are met.

3. Tracking controller design

To derive the conditions for designing the required controller, the following lemma will be used.

Lemma 1: (Li and Liu, 2009) For any constant matrices $S_{11} \geq 0$, S_{12} , $S_{22} \geq 0$, $\begin{bmatrix} S_{11} & S_{12} \\ * & S_{22} \end{bmatrix} \geq 0$, scalar $\tau \leq \bar{\tau}$ and vector function $\dot{x}:[-\bar{\tau},0] \to R^n$ such that the following integration is well defined, then

$$-\bar{\tau}\int_{t-\bar{\tau}}^{t}[x^T(s),\dot{x}^T(s)]\begin{bmatrix} S_{11} & S_{12} \\ * & S_{22} \end{bmatrix}\begin{bmatrix} x(s) \\ \dot{x}(s) \end{bmatrix} \leq \begin{bmatrix} x \\ x(\tau) \\ \int_{t-\tau}^{t} x(s)ds \end{bmatrix}^T \begin{bmatrix} -S_{22} & S_{22} & -S_{12}^T \\ S_{22} & -S_{22} & S_{12}^T \\ -S_{12} & S_{12} & -S_{11} \end{bmatrix} \begin{bmatrix} x \\ x(\tau) \\ \int_{t-\tau}^{t} x(s)ds \end{bmatrix} \tag{10}$$

We now choose a delay-dependent Lyapunov-Krasovksii functional candidate as

$$V=\bar{x}^T P\bar{x}+\bar{\tau}\int_{t-\bar{\tau}}^{t}(s-(t-\bar{\tau})\eta^T(s)S\eta(s)ds \tag{11}$$

where $\eta(s)=\left[\bar{x}^T(s),\dot{\bar{x}}^T(s)\right]^T$, P>0, $S=\begin{bmatrix} S_{11} & S_{12} \\ * & S_{22} \end{bmatrix}$, $S_{11}>0$, $S_{22}>0$, $\begin{bmatrix} S_{11} & S_{12} \\ * & S_{22} \end{bmatrix}>0$.
The derivative of V along the trajectory of (8) satisfies

$$\dot{V}=2\bar{x}^T P\dot{\bar{x}}+\bar{\tau}^2\eta^T S\eta-\bar{\tau}\int_{t-\bar{\tau}}^{t}\eta^T(s)S\eta(s)ds \tag{12}$$

If follows from (8) that

$$0=2[\bar{x}^T T_1+\bar{x}^T(\tau)T_2+\dot{\bar{x}}^T T_3+d_4\bar{v}^T]\left(\sum_{i,j=1}^{k} h_i h_j(\tau)[\bar{A}_i\bar{x}+\bar{B}_{ij}\bar{x}(\tau)+\bar{E}\bar{v}]-\dot{\bar{x}}\right) \tag{13}$$

i.e.,

$$0=2\sum_{i,j=1}^{k} h_i h_j(\tau)[\bar{x}^T \quad \bar{x}^T(\tau) \quad \dot{\bar{x}}^T \quad \bar{v}^T]\begin{bmatrix} T_1 \\ T_2 \\ T_3 \\ d_4 I \end{bmatrix}\begin{bmatrix} \bar{A}_i & \bar{B}_{ij} & -I & \bar{E} \end{bmatrix}\begin{bmatrix} \bar{x} \\ \bar{x}(\tau) \\ \dot{\bar{x}} \\ \bar{v} \end{bmatrix}$$

$$= \sum_{i,j=1}^{k} h_i h_j(\tau)[\bar{x}^T \quad \bar{x}^T(\tau) \quad \dot{\bar{x}}^T \quad \bar{v}^T] \left(\begin{bmatrix} T_1\bar{A}_i & T_1\bar{B}_{ij} & -T_1 & T_1\bar{E} \\ T_2\bar{A}_i & T_2\bar{B}_{ij} & -T_2 & T_2\bar{E} \\ T_3\bar{A}_i & T_3\bar{B}_{ij} & -T_3 & T_3\bar{E} \\ d_4\bar{A}_i & d_4\bar{B}_{ij} & -d_4 I & d_4\bar{E} \end{bmatrix} + \begin{bmatrix} T_1\bar{A}_i & T_1\bar{B}_{ij} & -T_1 & T_1\bar{E} \\ T_2\bar{A}_i & T_2\bar{B}_{ij} & -T_2 & T_2\bar{E} \\ T_3\bar{A}_i & T_3\bar{B}_{ij} & -T_3 & T_3\bar{E} \\ d_4\bar{A}_i & d_4\bar{B}_{ij} & -d_4 I & d_4\bar{E} \end{bmatrix}^T \right) \begin{bmatrix} \bar{x} \\ \bar{x}(\tau) \\ \dot{\bar{x}} \\ \bar{v} \end{bmatrix} \tag{14}$$

where T_1, T_2, and T_3 are constant matrices, and d_4 is a constant scalar. Note that d_4 is introduced as a scalar not a matrix because it is convenient to get the LMI conditions later. Using the above given equality (14) and Lemma 1, and adding two sides of (12) by $e^Te-\gamma^2\bar{v}^T\bar{v}$, it is obtained that

$$\begin{aligned} \dot{V}+e^Te-\gamma^2\bar{v}^T\bar{v} &\le 2\bar{x}^TP\dot{\bar{x}}+\bar{\tau}[\bar{x}^T,\dot{\bar{x}}^T]\begin{bmatrix} S_{11} & S_{12} \\ * & S_{22} \end{bmatrix}\begin{bmatrix} \bar{x} \\ \dot{\bar{x}} \end{bmatrix}+e^Te-\gamma^2\bar{v}^T\bar{v} \\ &+\begin{bmatrix} x \\ x(\tau) \\ \int_{t-\tau}^{t} x(s)ds \end{bmatrix}^T \begin{bmatrix} -S_{22} & S_{22} & -S_{12}^T \\ S_{22} & -S_{22} & S_{12}^T \\ -S_{12} & S_{12} & -S_{11} \end{bmatrix} \begin{bmatrix} x \\ x(\tau) \\ \int_{t-\tau}^{t} x(s)ds \end{bmatrix} \\ &+2\sum_{i,j=1}^{k} h_i h_j(\tau)[\bar{x}^T \quad \bar{x}^T(\tau) \quad \dot{\bar{x}}^T \quad \bar{v}^T] \begin{bmatrix} T_1 \\ T_2 \\ T_3 \\ d_4 I \end{bmatrix} \begin{bmatrix} \bar{A}_i & \bar{B}_{ij} & -I & \bar{E} \end{bmatrix} \begin{bmatrix} \bar{x} \\ \bar{x}(\tau) \\ \dot{\bar{x}} \\ \bar{v} \end{bmatrix} \\ &= \sum_{i,j=1}^{k} h_i h_j(\tau)\xi^T\Sigma_{ij}\xi \end{aligned} \tag{15}$$

where $\xi^T=\left[\bar{x}^T \quad \bar{x}^T(\tau) \quad \left(\int_{t-\tau}^{t}\bar{x}(s)ds\right)^T \quad \dot{\bar{x}}^T \quad \bar{v}^T\right]$ and

$$\Sigma_{ij}=\begin{bmatrix} \bar{\tau}^2S_{11}-S_{22}+T_1\bar{A}_i+\bar{A}_i^TT_1^T+\bar{C}^T\bar{C} & S_{22}+T_1\bar{B}_{ij}+\bar{A}_i^TT_2^T & -S_{12}^T & P+\bar{\tau}^2S_{12}-T_1+\bar{A}_i^TT_3^T & T_1\bar{E}+d_4\bar{A}_i^T \\ * & -\bar{S}_{22}+T_2\bar{B}_{ij}+\bar{B}_{ij}^TT_2^T & S_{12}^T & -T_2+\bar{B}_{ij}^TT_3^T & T_2\bar{E}+d_4\bar{B}_{ij}^T \\ * & * & -S_{11} & 0 & 0 \\ * & * & * & \bar{\tau}^2S_{22}-T_3-T_3^T & T_3\bar{E}-d_4I \\ * & * & * & * & d_4\bar{E}+d_4\bar{E}^T-\gamma^2I \end{bmatrix} \tag{16}$$

It can be seen from (15) that if $\Sigma_{ij} < 0$, then $\dot{V}+e^Te-\gamma^2\bar{v}^T\bar{v}<0$ can be deduced and therefore $\|e\|_2 <\gamma\|\bar{v}\|_2$ can be established with the zero initial condition. When the disturbance is zero, i.e., $\bar{v}=0$, it can be inferred from (15) that if $\Xi_{ij} < 0$, then $\dot{V}<0$, and the closed-loop system (8) is asymptotically stable.

By denoting $T_2=d_2T_1, T_3=d_3T_1$, where d_2 and d_3 are given constants, pre and post-multiplying both side of (16) with diag[Q, Q, Q, I, Q] and their transpose, defining new variables $Q=T_1^{-1}$, $\bar{S}_{11}=QS_{11}Q^T$, $\bar{S}_{12}=QS_{12}Q^T$, $\bar{S}_{22}=QS_{22}Q^T$, $\bar{P}=QPQ^T$, and $\bar{K}_j=K_jQ^T$, $\Sigma_{ij} < 0$ is equivalent to

$$\begin{bmatrix} \bar{\tau}^2\bar{S}_{11}-\bar{S}_{22}+\bar{A}_iQ^T+Q\bar{A}_i^T+Q\bar{C}^T\bar{C}Q^T & \bar{S}_{22}+\hat{B}_i\bar{K}_j+d_2Q\bar{A}_i^T & -\bar{S}_{12}^T & \bar{P}+\bar{\tau}^2\bar{S}_{12}-Q^T+d_3Q\bar{A}_i^T & \bar{E}+d_4Q\bar{A}_i^T \\ * & -\bar{S}_{22}+d_2\hat{B}_i\bar{K}_j+d_2\bar{K}_j^T\hat{B}_i^T & \bar{S}_{12}^T & d_3\bar{K}_j^T\hat{B}_i^T-d_2Q^T & d_2\bar{E}+d_4\bar{K}_j^T\hat{B}_i^T \\ * & * & -\bar{S}_{11} & 0 & 0 \\ * & * & * & \bar{\tau}^2\bar{S}_{22}-d_3Q-d_3Q^T & d_3\bar{E}-d_4Q \\ * & * & * & * & d_4\bar{E}+d_4\bar{E}^T-\gamma^2I \end{bmatrix} < 0 \tag{17}$$

which is further equivalent to $\Xi_{ij} < 0$ by the Schur complement, where

$$\Xi_{ij}=\begin{bmatrix} \bar{\tau}^2\bar{S}_{11}-\bar{S}_{22}+\bar{A}_iQ^T+Q\bar{A}_i^T & \bar{S}_{22}+\hat{B}_i\bar{K}_j+d_2Q\bar{A}_i^T & -\bar{S}_{12}^T & \bar{P}+\bar{\tau}^2\bar{S}_{12}-Q^T+d_3Q\bar{A}_i^T & \bar{E}+d_4Q\bar{A}_i^T & Q\bar{C}^T \\ * & -\bar{S}_{22}+d_2\hat{B}_i\bar{K}_j+d_2\bar{K}_j^T\hat{B}_i^T & \bar{S}_{12}^T & d_3\bar{K}_j^T\hat{B}_i^T-d_2Q^T & d_2\bar{E}+d_4\bar{K}_j^T\hat{B}_i^T & 0 \\ * & * & -\bar{S}_{11} & 0 & 0 & 0 \\ * & * & * & \bar{\tau}^2\bar{S}_{22}-d_3Q-d_3Q^T & d_3\bar{E}-d_4Q & 0 \\ * & * & * & * & d_4\bar{E}+d_4\bar{E}^T-\gamma^2I & 0 \\ * & * & * & * & * & -I \end{bmatrix} \tag{18}$$

In terms of the above given analysis, we now summarise the proposed tracking controller design procedure as:

i. define value for $\bar{\tau}$ and choose appropriate values for d_2, d_3, and d_4.
ii. solve the following LMIs

$$\Xi_{ii} < 0 \tag{19}$$

$$\Xi_{ij} + \Xi_{ji} < 0 \tag{20}$$

$$\begin{bmatrix} \bar{S}_{11} & \bar{S}_{12} \\ * & \bar{S}_{22} \end{bmatrix} \geq 0 \tag{21}$$

If there exist $\bar{P}>0$, $\bar{S}_{11}>0$, $\bar{S}_{22}>0$ and real matrices Q, $\bar{S}_{12}$, $\bar{K}_j$ (j=1,...k) satisfying LMIs (19-21), then the closed-loop system (8) is asymptotically stable for any $0 \leq \tau \leq \bar{\tau}$ and the tracking performance defined in (9) can be achieved.

iii. obtain the control gain matrices as

$$K_j=\bar{K}_j(Q^T)^{-1} \tag{22}$$

4. Numerical example

This section takes two-link robotic manipulator as an example and evaluates the proposed controller design approach through numerical simulations. In the reference (Tseng, Chen and Uang, 2001), the T-S fuzzy model with nine rules is used to represent the original nonlinear manipulator system with acceptable accuracy when link masses $m_1=m_2=1$ (kg), link lengths $l_1=l_2=1$ (m), and angular positions are constrained within $[-\pi/2, \pi/2]$, where triangle type membership functions are used for all the rules.

To show the effectiveness of the proposed controller design method, the stability control of the robotic manipulator with and without input delays is firstly evaluated. For comparison purpose, we introduce a so-called robust controller from (Sun, et al., 2007), which was designed using a region based rule reduction approach and obtained with one rule to reduce the complexity caused by the number of fuzzy rules. The design result for this controller with a decay rate 0.5 was given as

$$K=\begin{bmatrix} -115.6439 & -49.9782 & -13.4219 & -3.7453 \\ 14.6547 & -3.4203 & -62.7788 & -22.1846 \end{bmatrix} \tag{23}$$

The simulation results for the nonlinear model (1) with initial condition $x(0)=[1.2,0,-1.2,0]^T$ and controller (23) without input delays are shown in Fig. 2.

It is seen from Fig. 2 that all the state variables converge to the equilibrium states from initial conditions quickly. We now introduce input delays to the two control inputs. As an example, input delays for both control inputs are given as 24 ms, and the simulation results for all state variables are shown in Fig. 3.

It is observed that the state variables do not converge to equilibrium states in this case and hence controller (23) is not able to stabilise the system when input time delays are given as 24 ms.

Following the similar idea given in (Sun, et al., 2007), a robust controller which uses only one rule and considers the fuzzy model as a polytopic uncertain model can also be designed using the presented conditions (19-21). We now use the reference model as

$$A_r=\begin{bmatrix} 0 & 1 & 0 & 0 \\ -6 & -5 & 0 & 0 \\ 0 & 0 & 0 & 1 \\ 0 & 0 & -6 & -5 \end{bmatrix},$$

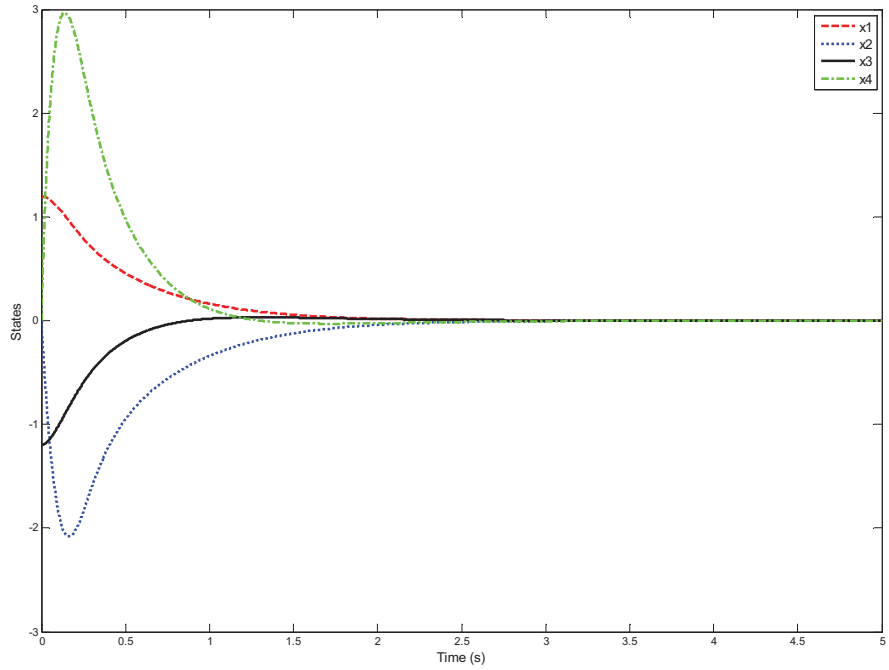

Fig. 2. State responses for controller (23) without input delays.

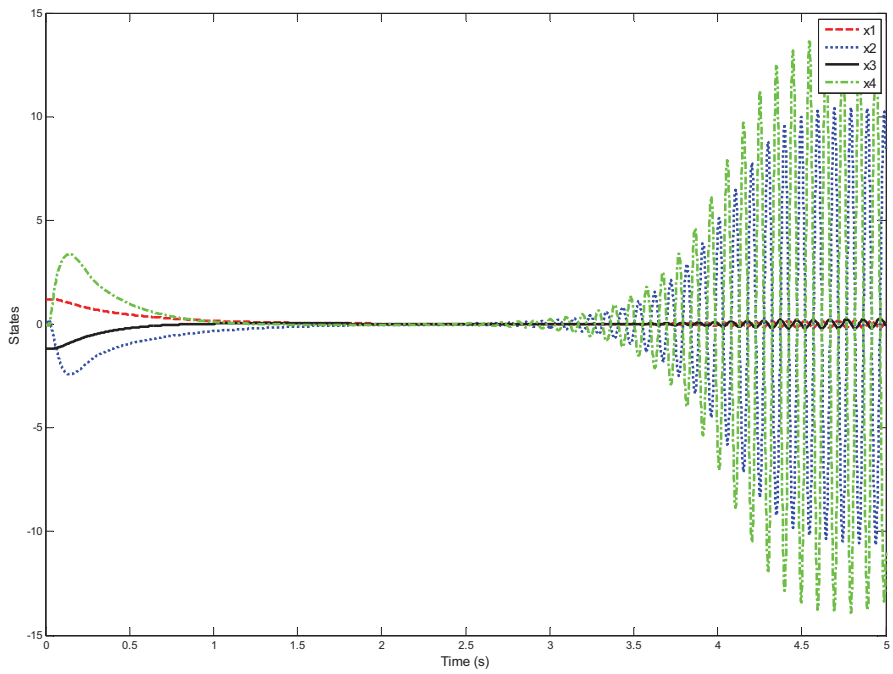

Fig. 3. State responses for controller (23) with input delay as 24 ms.

choose $\bar{\tau}$ =30 ms, d_2=0.1, d_3=0.1, d_4=0.1, and define $\bar{C}=\begin{bmatrix} 10 & 0 & 0 & 0 & -10 & 0 & 0 & 0 \\ 0 & 0 & 10 & 0 & 0 & 0 & -10 & 0 \end{bmatrix}$, which aims on reducing tracking errors on state variables x_1 and x_3, the LMIs (19-21) are feasible to find a solution, and the controller gain matrix is obtained as

$$K=\begin{bmatrix} -52.5581 & -14.8674 & 0.7159 & -0.0785 & 33.3479 & 5.8168 & -5.0603 & -0.6409 \\ -0.6312 & -0.5382 & -31.8608 & -8.5689 & -1.9704 & -0.2084 & 22.7118 & 3.7215 \end{bmatrix} \tag{24}$$

To check the stability control performance of the designed controller (24), the reference input and external disturbances are all set as zero, and the initial conditions are same to the above used values. The simulation results with controller (24) are now shown in Fig. 4 when input delays are given as 30 ms.

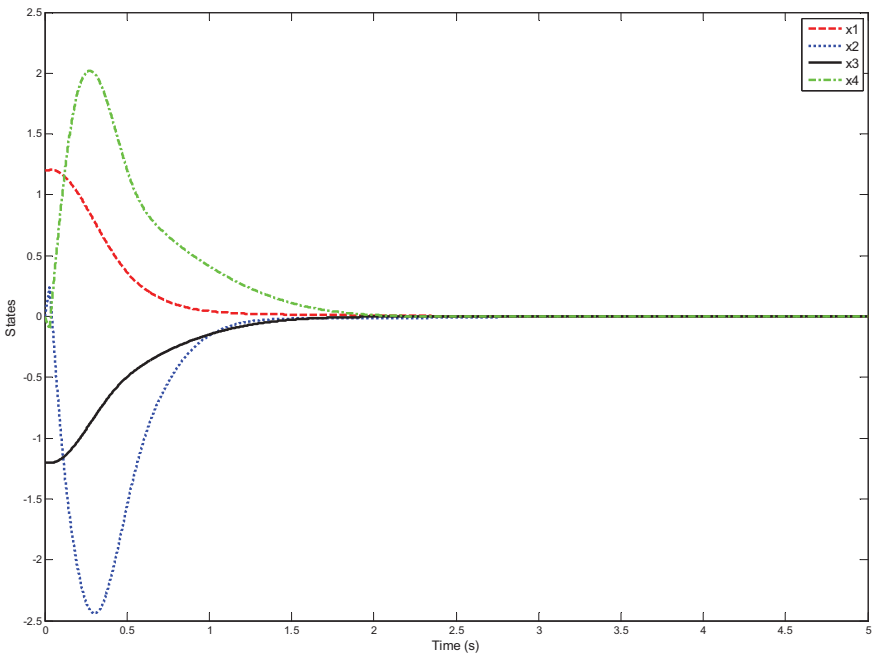

Fig. 4. State responses for controller (24) with input delays as 30 ms.

It is seen from Fig. 4 that all the state variables converge to equilibrium states no matter the existence of the input time delays, which shows the effectiveness of the designed controller (24) when the input time delays are considered in the controller design procedure.

As controller (24) is designed using the tracking controller design conditions (19-21), its tracking control performance can be checked as well when the reference inputs are provided. As those done in (Tseng, Chen and Uang, 2001), we define reference input as $r(t)=[0, 8\sin(t), 0, 8\cos(t)]^T$ and to validate its robustness, the external disturbances are given

as w_1=0.1sin(2t), w_2=0.1cos(2t), w_3=0.1cos(2t), and w_4=0.1sin(2t). The initial condition is assumed to be $[x_1(0),x_2(0),x_3(0),x_4(0)]^T=[0.5,\ 0,\ -0.5,\ 0]^T$, and the input time delays are assumed to be 30 ms. Under these conditions, the simulation responses for both the reference state variables and actual state variables are shown in Fig. 5 for x_1 (left) and x_3 (right), respectively. From Fig. 5, it is observed that the actual state variables are able to track the reference state variables although there is a big difference at the beginning due to different initial values. It proves that the designed controller (24), in spite of its simplicity in structure, can stabilise the nonlinear manipulator system and can basically track the reference state variables.

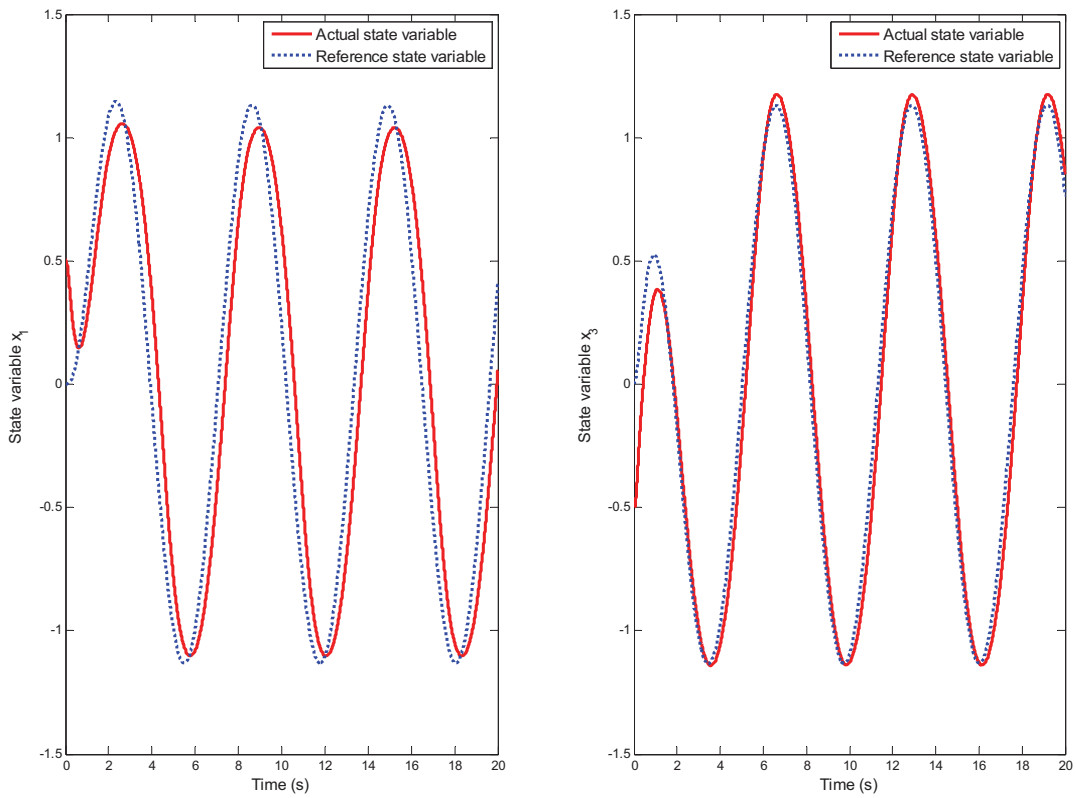

Fig. 5. State responses for the designed controller (24) with input delays as 30 ms.

Nevertheless, from Fig. 5, it is also seen that the tracking performance is not really desirable as the differences between the reference state variables and the actual state variables can be easily identified, in particular, for state variable x_1 (left). The poor tracking performance realised by controller (24) comes from the reasons that it is one rule based controller and therefore it is weak in achieving good performance for the original model which is approximated with nine rules.

We now design a fuzzy tracking controller through PDC strategy by using the proposed approach. Using the same parameter values for $\bar{\tau}$, d_2, d_3, d_4, and $\bar{C}$, the LMIs (19-21) are feasible to find a solution, and the controller gain matrices for nine rules are given as

$$K_1=\begin{bmatrix} -115.9265 & -19.4020 & -51.6975 & -9.0525 & 101.1323 & 12.6747 & 45.3281 & 5.8894 \\ -53.0984 & -9.4817 & -58.7058 & -9.9765 & 48.3992 & 6.1958 & 51.9449 & 6.5429 \end{bmatrix}$$

$$K_2=\begin{bmatrix} -141.9683 & -23.5791 & 0.2777 & -0.3129 & 124.8768 & 15.4512 & -2.2731 & 0.0976 \\ -3.4846 & -0.5815 & -88.7399 & -14.9675 & 0.2146 & 0.2869 & 80.2204 & 9.8727 \end{bmatrix}$$

$$K_3=\begin{bmatrix} -115.5704 & -19.0475 & 55.4697 & 9.1381 & 102.6000 & 12.5192 & -52.2332 & -6.1268 \\ 54.2377 & 9.4285 & -55.4358 & -9.5060 & -51.7672 & -6.2518 & 52.6118 & 6.3387 \end{bmatrix}$$

$$K_4=\begin{bmatrix} -146.4229 & -23.9600 & 0.6201 & -0.1205 & 126.9068 & 15.6729 & -3.3843 & -0.0513 \\ 1.2587 & -0.3380 & -90.8831 & -15.0851 & -0.9041 & 0.1750 & 80.8721 & 9.9366 \end{bmatrix}$$

$$K_5=\begin{bmatrix} -121.6095 & -19.5529 & -50.2643 & -8.9250 & 101.9231 & 12.7272 & 44.6201 & 5.8019 \\ -51.8299 & -9.3220 & -62.0814 & -10.0800 & 47.5336 & 6.0782 & 52.4858 & 6.5645 \end{bmatrix}$$

$$K_6=\begin{bmatrix} -145.5178 & -23.8434 & -0.1544 & -0.2041 & 126.2843 & 15.5980 & -2.9193 & 0.0002 \\ 0.3571 & -0.4417 & -90.2942 & -15.0410 & -0.5286 & 0.2197 & 80.6263 & 9.9110 \end{bmatrix}$$

$$K_7=\begin{bmatrix} -115.6616 & -19.0441 & 55.1637 & 9.1441 & 102.6047 & 12.5166 & -52.2722 & -6.1372 \\ 54.5435 & 9.4487 & -55.3558 & -9.5095 & -51.7828 & -6.2513 & 52.6340 & 6.3439 \end{bmatrix}$$

$$K_8=\begin{bmatrix} -142.5607 & -23.6137 & 0.4674 & -0.2926 & 125.0556 & 15.4695 & -2.3887 & 0.0840 \\ -2.8051 & -0.5295 & -89.1068 & -14.9940 & 0.1127 & 0.2772 & 80.3652 & 9.8887 \end{bmatrix}$$

$$K_9=\begin{bmatrix} -116.9415 & -19.5309 & -50.5115 & -8.8252 & 101.8508 & 12.7564 & 44.0836 & 5.7350 \\ -52.3753 & -9.3980 & -59.5804 & -10.1199 & 47.9301 & 6.1423 & 52.7279 & 6.6383 \end{bmatrix}$$

The tracking performance implemented by this fuzzy controller is shown in Fig. 6. It can be seen that the differences between the reference state variables and the actual state variables are largely reduced for both state variables. The tracking performance is therefore improved even with the existence of input time delays.

It is noted that in the proposed controller design approach, several parameters like d_2, d_3, and d_4, need to be defined before starting to solve the LMIs. These parameters could be optimised in terms of the tolerable maximum input delays $\bar{\tau}$, tracking performance γ, and feasible solutions to LMIs (19-21), etc. The weights on matrix $\bar{C}$ will also play an important role in obtaining a good tracking performance. Higher weight value on one state variable will generally result in a controller which can reduce the tracking error on this state variable in comparison to other variables. However, these parameters need to be considered altogether and some possible optimisation algorithms, such as genetic algorithms (GAs), could be used to find the sub-optimal parameters, which, however, is beyond the scope of this chapter, and will not be further discussed.

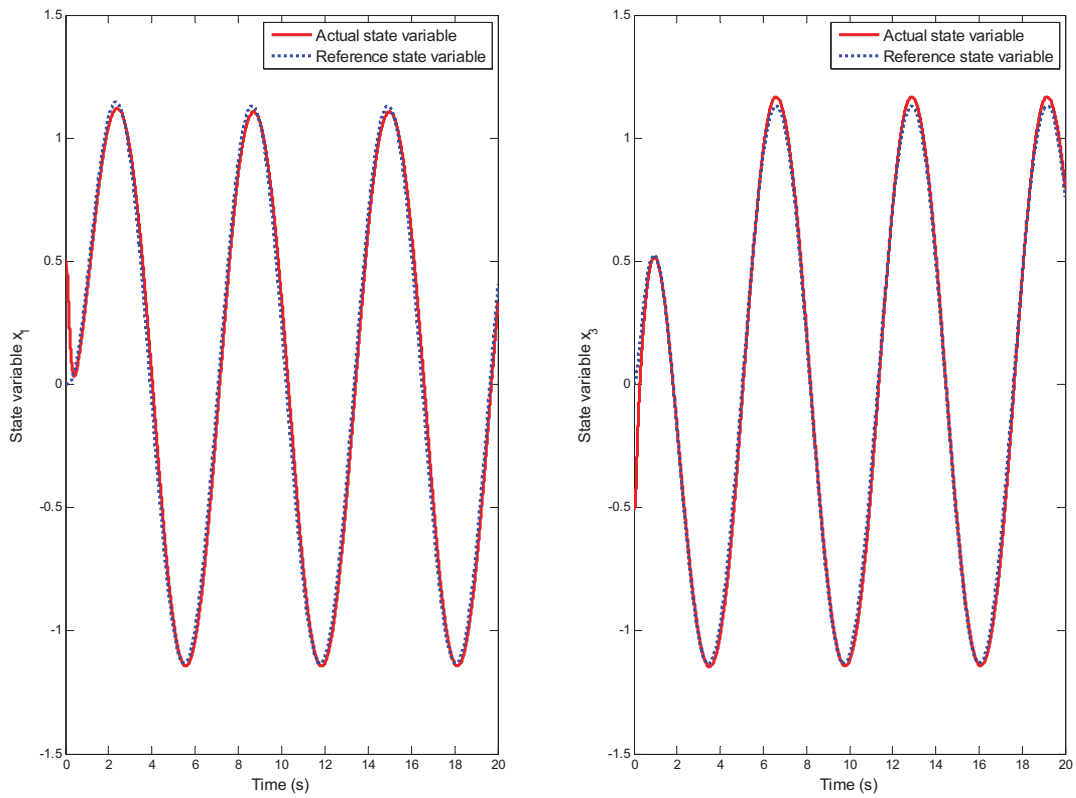

Fig. 6. State responses for the proposed fuzzy tracking controller with input delays as 30 ms.

5. Conclusions

In this chapter, the tracking control problem for a robotic manipulator with input time delays is studied. To deal with the nonlinear dynamics of robotic manipulator, the T-S fuzzy control strategy is applied. To reduce the conservativeness in deriving conditions for designing such a tracking controller, the most advanced techniques in defining Lyapunov-Krasovskii functional and in solving cross terms are used. To achieve good tracking performance, the tracking error in the sense of H_∞ norm is minimised. The sufficient conditions are derived as delay-dependent LMIs, which can be solved efficiently using currently available software like Matlab LMI Toolbox. The solution is also dependent to the values of d2, d3, d4, and the weights on matrix $\bar{C}$, which may further provide the space to improve the performance of the designed controller. Numerical simulations are applied to validate the performance of the proposed approach. The results show that the designed controller can achieve good tracking performance regardless of the existence of input time

delays. This topic is going to be further studied with considering modelling errors, parameter uncertainties, and actuator saturations.

6. References

Begovich, O., Sanchez, E. N. and Maldonado, M. (2002). Takagi-Sugeno fuzzy scheme for real-time trajectory tracking of an underactuated robot, *IEEE Transactions on Control Systems Technology*, Vol. 10, No. 1, 14-20

Lin, C., Wang, Q. G. and Lee, T. H. (2007). *LMI Approach to Analysis and Control of Takagi-Sugeno Fuzzy Systems with Time Delay*, Springer, New York.

Chen, B., Liu, X., Lin, C. and Liu, K. (2009). Robust H_∞ control of Takagi-Sugeno fuzzy systems with state and input time delays, *Fuzzy Sets and Systems,* Vol. 160, 403-422

Chopra, N. (2009). Control of robotic manipulators with input/output delays, Proceedings of the American Control Conference, St. Louis, MO, USA, 2024-2029

Feng, G. (2006). A survey on analysis and design of model-based fuzzy control systems, IEEE Transactions on Fuzzy Systems, Vol. 14, No. 5, 676-697

Ho, H. F., Wong, Y. K. and Rad, A. B. (2007). Robust fuzzy tracking control for robotic manipulators, Simulation Modelling Practice and Theory, Vol. 15, 801-816

Hokayem, P. F. and Spong, M. W. (2006). Bilateral teleoperation: An historical survey, Automatica, Vol. 42, 2035-2057

Li, L. and Liu, X. (2009). New results on delay-dependent robust stability criteria of uncertain fuzzy systems with state and input delays, Information Sciences, Vol. 179, 1134-1148.

Lin, C., Wang, Q.-G. and Lee, T. H. (2006). H_∞ output tracking control for nonlinear systems via T-S fuzzy model approach, IEEE Transactions on Systems, Man and Cybernetics—Part B: Cybernetics, Vol. 36, No. 2, 450-457

Liu, F., Wu, M., He, Y. and Yokoyama, R. (2010). New delay-dependent stability criteria for T-S fuzzy systems with time-varying delay, Fuzzy Sets and Systems, Vol. 161, 2033-2042.

Ma, X.-J. and Sun, Z.-Q. (2000). Output tracking and regulation of nonlinear system based on Takagi-Sugeno fuzzy model, IEEE Transactions on Systems, Man and Cybernetics—Part B: Cybernetics, Vol. 30, No. 1, 47-59

Sun, C.-C., Wu, S.-M., Chung, H.-Y. and Chang, W.-J. (2007). Design of Takagi-Sugeno fuzzy region controller based on rule reduction, robust control, and switching concept, *Journal of Dynamic Systems, Measurement, and Control*, Vol. 129, 163-170

Tanaka, K. andWang, H. O. (2001). Fuzzy control systems design and analysis: A linear matrix inequality approach, John Wiley & Sons, Inc., New York

Tong, S., Wang, T. and Li, H.-X. (2002). Fuzzy robust tracking control for uncertain nonlinear systems, International Journal of Approximate Reasoning, Vol. 30, 73-90

Tseng, C.-S., Chen, B.-S. and Uang, H.-J. (2001). Fuzzy tracking control design for nonlinear dynamic systems via T-S fuzzy model, IEEE Transactions on Fuzzy Systems, Vol. 9, No. 3, 381-392

Xu, S. and Lam, J. (2008). A survey of linear matrix inequality techniques in stability analysis of delay systems, International Journal of Systems Science, Vol. 39, 1095-1113