University of Wollongong
Research Online

Faculty of Engineering - Papers (Archive)

Faculty of Engineering and Information Sciences

2012

Study on a seawater hydraulic piston pump with check valves for underwater tools

X He
University of Science and Technology, Wuhan, People's Republic of China

B Zhu
University of Science and Technology, Wuhan, People's Republic of China

Y Liu
University of Science and Technology, Wuhan, People's Republic of China

Z Jiang
University of Wollongong, jiang@uow.edu.au

Publication Details

He, X., Zhu, B., Liu, Y. & Jiang, Z. (2012). Study on a seawater hydraulic piston pump with check valves for underwater tools. Proceedings of the Institution of Mechanical Engineers Part A: Journal of Power and Energy, 226 151-160.

Research Online is the open access institutional repository for the University of Wollongong. For further information contact the UOW Library: research-pubs@uow.edu.au

Study on a seawater hydraulic piston pump with check valves for underwater tools

X He[1], **B Zhu**[1]*, **Y Liu**[1], and **Z Jiang**[2]
[1]School of Mechanical Science and Engineering, Huazhong University of Science and Technology, Wuhan, People's Republic of China
[2]School of Mechanical, Materials and Mechatronic Engineering, University of Wollongong, New South Wales, Australia

The manuscript was received on 24 July 2010 and was accepted after revision for publication on 20 January 2011.

DOI: 10.1177/0957650911399987

Abstract: The aim of this study is to develop a seawater hydraulic piston pump for the power pack of an underwater tool system. A pump with check valves and oil–water-separated structure was selected for the purpose of improving its tolerance to particles when applied in open-circuit system. A novel 'anti-loosening' structure was introduced for the piston/shoe assembly. To improve the anti-wear and anti-corrosion performances of the piston and sleeve pairs under seawater lubrication, carbon fibre-reinforced polyetheretherketone was injected as an inner of the sleeve, and synthesized WC was formed on the piston with improved surface hardness. The unbalance problem of the shaft assembly was solved based on Solidworks software by adjusting the centre of mass of the shaft to its rotation axis and making all the products of inertia close to zero for an arbitrary-given coordinate system in which one of its axes is at the rotation axis. Basic performances and reliability experiments for the pump were carried out on a test rig. The shaft assembly was verified by experiment to reach very desirable balance effect. The pump has relative high efficiency at 10 MPa rated pressure and 14 MPa maximum pressure. After 300 h durability test, neither excessive wear could be found for the piston/sleeve pairs as well as other parts in the pump, nor obvious performance degradation happened to the pump. The dynamic balancing method presented in this article provides an easy and effective way to solve the unbalance problem for a shaft with special structure and can be widely used in other rotating machines. New design on the seawater hydraulic pump was initially confirmed to be feasible, although further research needs to be conducted. The pump has been successfully applied in an underwater seawater hydraulic tool system.

Keywords: seawater hydraulics, piston pump, design, dynamic balance, reliability

1 INTRODUCTION

Although oil-driven hydraulic system has been the leading power source for all kinds of devices operated underwater in the last few decades, using seawater instead of mineral oil as the pressure medium of fluid power systems has become the tendency with the advancement of water hydraulic technology. Seawater hydraulic systems can offer a number of advantages over those using conventional mineral oil [**1**].

1. The intrusion of seawater into hydraulic system will not destroy the precision-machined components or cause degradation to their performances.
2. The leakage from hydraulic system will not result in environmental pollution.
3. Elimination of return hose will reduce not only the pressure lose along the line, but also the drag force from underwater current and surge, which help to increase the operation depth and system efficiency.

**Corresponding author: School of Mechanical Science and Engineering, Huazhong University of Science and Technology, Wuhan 430074, People's Republic of China.*
email: zhu_bihai@163.com

4. The medium is easily available, which will eliminate the charge of storage, purchase, or shipment of hydraulic fluids. Moreover, the waste fluids treatment is no longer required.

In 2008, Huazhong University of Science and Technology conducted the development of an underwater tool system driven by seawater power. In this study, the hydraulic power pack will be put on ship deck or seacoast, the pressured seawater is fed into different kinds of tools through a single hose. The main demands for the power pack are that its rated pressure is 10 MPa, maximum pressure 14 MPa, rated flowrate 20 L/min, and mean time between failures not less than 300 h. Without any doubt that the seawater hydraulic pump is one of the key components in the power pack.

With respect to the seawater hydraulic pump, previous research has focused more on the type with port plate.

The National Engineering Laboratory and University of Hull (UK) [**2**] developed a seawater hydraulic pump with port plate and fixed retaining ring, as shown in Fig. 1. The pump can operate at pressure up to 14 MPa with only 120 μm filtration without significant deterioration in performance using advanced engineering ceramics sliding on fibre-reinforced polymers for all moving interfaces in the pump, and has been used in an autonomous subsea control system for a gas wellhead. However, the wear rate of the polyetheretherketone (PEEK) port plate in the seawater environment was considered to be too high after nearly 300 h test, although the counter face made of stainless steel was modified by a ceramic plate.

Danfoss Company (Finland) [**3**] has developed APP series water pumps, as shown in Fig. 2, which can use seawater as pressure medium. The maximum pressure of the pump at continuous working conditions is 8 MPa. Its technical data are listed in Table 1. This is one of the smallest and lightest pumps in the market with long service life and high efficiency. All parts of the pump are made of non-corrosive materials, e.g. Duplex (SAF 2205/EN1.4462) and Super-duplex (SAF 2507/EN1.4410) stainless steel and carbon-reinforced PEEK (CFRP); but the inlet water should be filtered to 10 μm to minimize the wear of the pump.

In 1994, Tampere University of Technology and Hytar Oy Water hydraulic (Finland) [**4**] began to develop a set of seawater hydraulic components and power pack to be used in subsea application for EUREKA-program. Figure 3 shows the structure of the developed seawater hydraulic pump with port plate, in which the key friction pairs are made of fibre-reinforced polymer composite and hard metal or ceramic. Its rated pressure is 21 MPa, rated flow is 30 L/min, and volumetric efficiency 92 per cent.

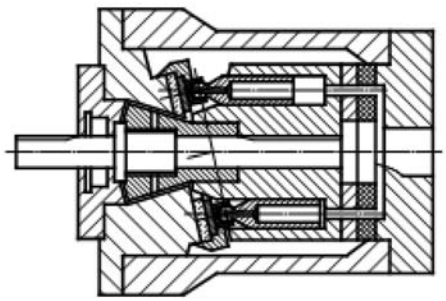

Fig. 1 Schematic diagram of Hull seawater pump

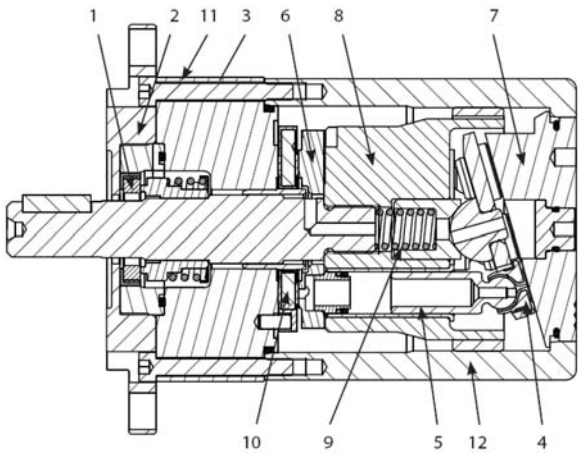

Fig. 2 Cross-sectional view of Danfoss APP pump

Table 1 Technical data of APP pumps

APP pumps	APP0.6	APP1.0	APP1.5	APP1.8	APP2.2	APP2.5	APP3.0	APP3.5
Geometric displacement (cm^3/(r/min))	4	6.3	9.3	10	12.5	15.3	17.7	20.5
Flow, 3000 r/min (m^3/h)	0.6	1.0	1.5	1.7	2.1	2.6	3.0	3.5
Maximum pressure, continuous (MPa)	8	8	8	8	8	8	8	8
Maximum speed continuous (r/min)	3450	3450	3450	3450	3450	3000	3000	3000
Weight (kg)	5.2	5.2	8.6	8.6	8.6	8.6	8.6	8.6

Komatsu Limited [**5**] developed a seawater hydraulic pump for an underwater manipulator, as shown in Fig. 4. All bearings and frictional parts are constructed of CFRP and ceramics. In addition, a seawater static pressure lubrication mechanism is applied to these parts in order to protect them from wear and seizing.

Figure 5 shows a seawater hydraulic pump developed by Mitsubishi Heavy Industries Limited [**5**]. The basic construction is identical to axial swash plate pump. However, all the inside bearings are of sliding type and lubricated by water.

Kayaba Industry Company Limited [**5**] developed a bent axis-type water hydraulic pump. The sliding parts of the pump adopt resin and ceramic materials. Ceramic journal bearings are used to provide radial support instead of sliding bearings which are more usual in other water hydraulic pumps.

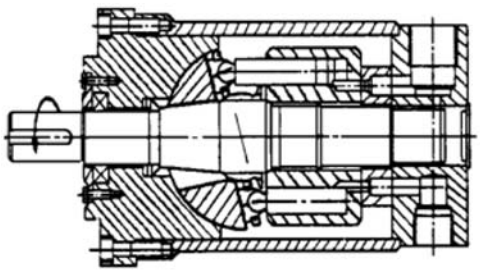

Fig. 3 Construction of Hytar seawater hydraulic pump

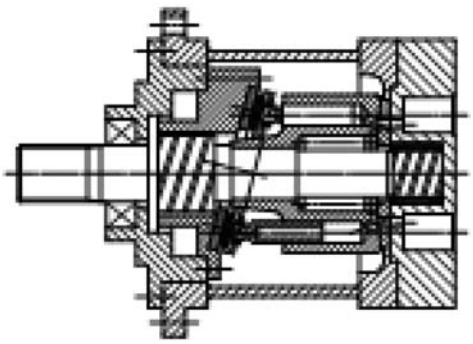

Fig. 4 Construction of Komatsu seawater hydraulic pump

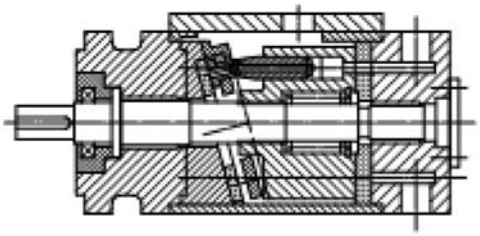

Fig. 5 Construction of Mitsubishi seawater hydraulic pump

Table 2 lists the main performances of the three types of water hydraulic pumps from Japanese companies.

It is worth noting that all the above-mentioned water hydraulic pumps are port plate types and generally have the advantages of compact structures and lightweight. However, on the other hand, they usually have relative lower anti-contamination ability compared with those of check valve types. As mentioned in the literature [**1**], the weakness of this type of pump lies in the excessive wear of the port plate/cylinder block interface, especially when applied in 'dirty' water environment without fine filtration. For this consideration, the seawater hydraulic pump with check valves became the final selection for the project, and was anticipated to achieve high reliability.

This article introduces some work on the development of the seawater hydraulic pump with check valves. First, the structure and characteristics of the pump are illustrated, in which a novel structure of the piston and sleeve pairs is presented, as well as the associated materials selection. Then, a method of using Solidworks software to solve the dynamic balancing problem of the shaft assembly is described and verified by experiment. Finally, tests on the basic performances and reliability of the pump are conducted and some conclusions are subsequently obtained.

2 STRUCTURE AND WORKING PRINCIPLE OF THE SEAWATER HYDRAULIC PUMP

Figure 6 shows the developed seawater hydraulic piston pump. The pump contains a seawater chamber at the left side of the pistons 5 and an oil chamber 22, which are separated by Glyd rings 7. Bores 8 and leakage port 23 provide channels for leakage flow from water chamber and oil chamber. The pump has seven groups of pistons 5 and sleeves 6, as well as their associated pressure valves 3 and suction valves 25. When the shaft 15 is rotating, some of the

Table 2 Specifications of water hydraulic pumps from Japanese companies

Item	Specifications		
	Komatsu pump	Mitsubishi pump	Kayaba pump
Working fluid	Seawater	Seawater	Water
Rated pressure (MPa)	21	21	14
Rated flowrate (L/min)	30	100	24
Rated revolution (r/min)	1500	1800	1500
Efficiency (%)	92	81	84

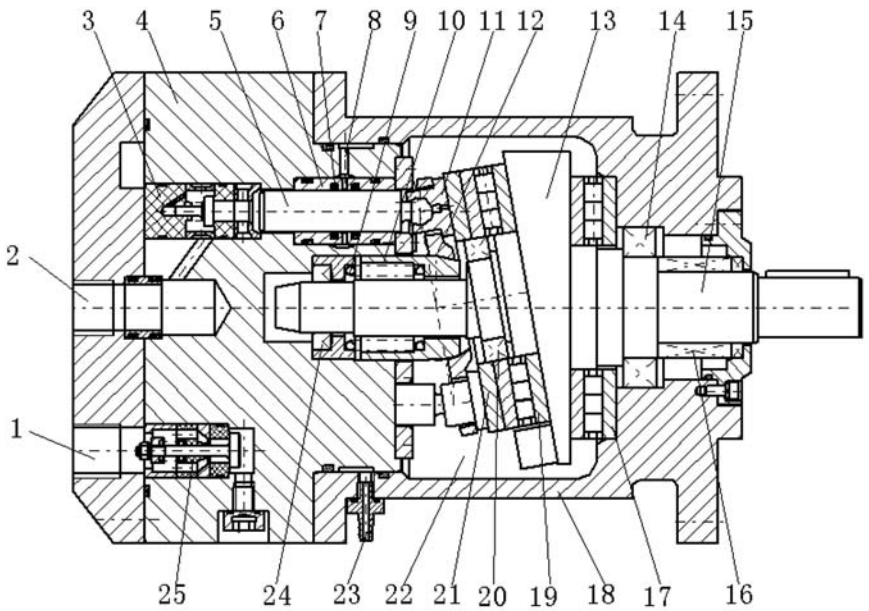

1-inlet 2-outlet 3-pressure valves 4-cylinder body 5-pistons 6-sleeves 7-Glyd Rings 8-bores 9-return spring 10-ball joint

11-shoes 12-retaining ring 13-swash plate 14、20、24-ball bearings 15-shaft 16-mechanical seal 17、19-thrust bearings

18-pump body 21-thrust plate 22-oil chamber 23-leakage port 25-suction valves

Fig. 6 Schematic diagram of the seawater hydraulic piston pump

pistons 5 will move left along sleeves 6 due to the thrust force from swash plate 13, thrust bearing 19, and thrust plate 21, while their associated pressure valves will open. Simultaneously, other pistons will move right by the force from spring 9, ball joint 10, and retaining ring 12, while their associated suction valves will open.

The pump has the following characteristics.

1. Most of the friction pairs in the pump, such as piston balls/shoes 11, shoes/thrust plate, ball joint/retaining ring, and all bearings, can be lubricated by oil to avoid corrosion and wear caused by seawater, which also makes the materials selection easy.
2. The shoes will slide slowly on the thrust plate due to the existences of the thrust bearing 19 and the ball bearing 20; hence, small PV level and further low wear rate will occur on this friction pairs.
3. The swash plate is designed with a relative small angle (10°) for the purposes of reducing the lateral forces and wear rate between pistons and sleeves, although it is negative to the compact and light-weight of the pump.
4. The pump with check valves can tolerate a certain level of particle contamination, which is a very important feature when it is applied in 'dirty' water environment without fine filtration.

The volumetric displacement of the pump is 37×10^{-3} L/rev, rated pressure 10 MPa, maximum pressure 14 MPa, and rated speed 750 r/min.

3 DESIGN ON A NEW STRUCTURE OF PISTON AND SLEEVE PAIRS FOR THE SEAWATER HYDRAULIC PUMP

Apart from the piston/sleeve pairs, other main friction pairs in the pump in Fig. 6 were lubricated by mineral oil. Hence, this friction pairs should be paid more attention either in structure design or in material selection.

Unfortunately, the existence of two Glyd rings in each sleeve will greatly increase extra friction while a piston moves forth and back along a sleeve, which may cause fatigue damage to the piston shoe. Figure 7 shows a traditional structure of piston and shoe assembly; the shoe is usually made of relatively low-strength plastic metal, e.g. copper alloy and connected with piston ball by pressing and/or rolling process; therefore, big clearance will probably appear between piston ball and the shoe not after a long period of service in this case, and the shoe will be inevitably loosened out from the piston ball finally, which is one of the main factors leading to failure for this type of pump and has been proved to be true by prior experiments.

To solve this problem, a new structure is designed for the seawater hydraulic pump, as shown in Fig. 8. It can be seen that the piston ball is separated from piston, and they are connected together by screw thread and welding method. The shoe is composed of inner and outer parts which will be welded into a whole after being assembled with piston and piston ball. This structure cancels metal plastic deformation process which is necessary when packing the traditional piston with the shoe, and makes it possible to select high-strength and non-plastic materials for piston balls and shoes. In this study, alloy steel and cast iron with high strength and hardness after heat treatment were selected for the piston balls and the shoes, respectively.

When a piston is in discharge stroke, it is pushed back to the cylinder bore by the thrust plate through its inner shoe, and in suction stroke, the piston will be drawn out of the cylinder bore by spring force and the retaining ring through outer shoe. Anyway, the two parts of the shoe will not be loosened out from the piston ball if they have sufficiently high mechanical strength, so it can be called an 'anti-loosening' structure.

Compared with tap water, seawater is more corrosive. Hence, some martensitic or precipitation–hardening stainless steels, which can be used in tap water and can be hardened by relative heat treatments, will no longer apply in seawater. Although some stainless steels with low carbon contents have good anti-corrosion ability in seawater, they are difficult to be improved in surface hardness which will be negative to their wear resistance and bring challenge to the selection of materials for the pistons.

To improve the anti-wear and anti-corrosion abilities of the piston and sleeve pairs under seawater lubrication condition, duplex stainless steel and CFRP combinations were used for the pistons and the sleeves. CFRP was injected to the bores of the sleeve bases made of copper alloy, as shown in Figs 9 and 10. Instead of traditional heat treatment, a synthesized WC was formed on the piston surface by carburizing after high-energy ion implant with W, and the thickness of implanted coating could reach 1.0 mm. Subsequently, the surface hardness of the pistons was increased from HRC 25 to HRC 52 and in a gradient distribution from surface to centre.

4 DYNAMIC BALANCE OF THE SHAFT ASSEMBLY

In a machine, dynamic unbalance often induces vibration, noise, wear, and fatigue problems [**6**], and should be eliminated in design and manufacturing process. The shaft with swash plate in the seawater hydraulic pump in Fig. 6 has a horizontal and a

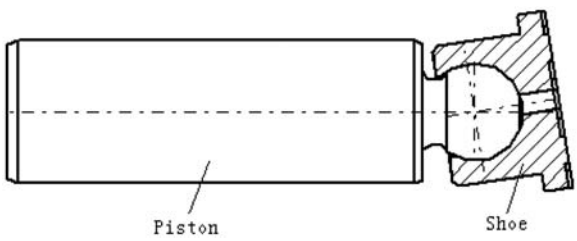

Fig. 7 Traditional structure of piston and shoe assembly

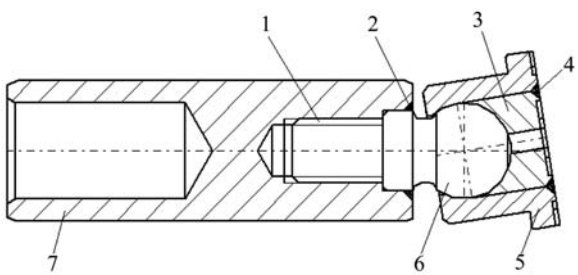

1-screw thread 2、4-circular welding zones 3-inner shoe
5-outer shoe 6-piston ball 7-piston body

Fig. 8 New structure of piston and shoe assembly

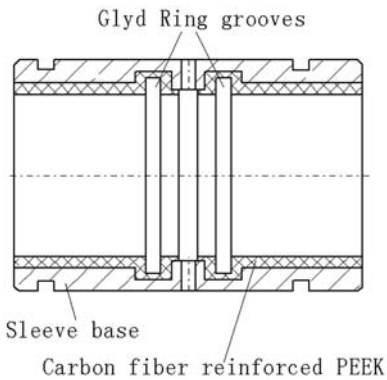

Fig. 9 Cross-sectional view of sleeve with CFRP liner

Fig. 10 Picture of sleeves with CFRP liner

declining centre-line; hence, it is a naturally unbalancing structure. In addition, the fixed plate, rollers, and roller cage of the left thrust bearing 19, and the inner race, balls and balls holder of the ball bearing 20 will bring extra unbalance to the shaft, which can be seen in Fig. 11. To reduce the unbalance of the shaft, some radial and axial bores were drilled on the swash plate, however it is not enough. Using Solidworks software, the position of centre of mass and tensor of inertia for the assembly can be clearly known, as shown in Fig. 11.

Taking the centre-point of the right face of the swash plate as the origin of coordinates, the centre of mass of the assembly is located at

$$(x, y, z) = (-21.328, 0.000, 4.388)(\text{mm})$$

The tensor of inertia to the given coordinate system can be expressed as

$$I = \begin{bmatrix} I_{xx} & I_{xy} & I_{xz} \\ I_{yx} & I_{yy} & I_{yz} \\ I_{zx} & I_{zy} & I_{zz} \end{bmatrix} = \begin{bmatrix} 45\,028\,810.757 & -15.462 & 4\,533\,502.120 \\ -15.462 & 77\,676\,526.488 & -104.841 \\ 4\,533\,502.120 & -104.841 & 78\,639\,562.424 \end{bmatrix} (\text{g mm}^2) \quad (1)$$

The above results show that the centre of mass is located at x–z coordinate plane, and the product of inertia values I_{xz} and I_{zx} at this plane are much higher than that of the other two planes.

From the fundamental principle of dynamic balance, if a rotating shaft is ideally balanced, then the following conclusions can be derived.

1. The centre of mass of the shaft should be located at its rotation axis.
2. All the products of inertia for an arbitrary given coordinate system, in which one of its axes is at the rotation axis, should be zero.

According the principle, a moon-shaped plate and an eccentric disc were fixed on the left face of the swash plate and the input shaft side, as shown in Fig. 12. Then, the centre of mass and the tensor of inertia after balancing were changed to

$$(x, y, z) = (8.629, 0.000, 0.000)(\text{mm})$$

and

$$I = \begin{bmatrix} I_{xx} & I_{xy} & I_{xz} \\ I_{yx} & I_{yy} & I_{yz} \\ I_{zx} & I_{zy} & I_{zz} \end{bmatrix} = \begin{bmatrix} 62\,853\,438.792 & -15.421 & -185.195 \\ -15.421 & 108\,226\,406.742\,87 & -105.058 \\ -185.195 & -105.058 & 107\,209\,345.233 \end{bmatrix} (\text{g mm}^2) \quad (2)$$

The results show that the centre of mass of the new assembly in Fig. 12 was adjusted to the x axis, and the product of inertia values at x–z coordinate plane were also reduced remarkably, which were as small as that of the other two coordinate planes.

To verify the effectiveness of the dynamic balancing method, the shaft assembly was tested on a dynamic balancing machine, as shown in Fig. 13.

When the shaft assembly was tested on the machine before it is balanced, it jumped acutely

Fig. 11 Three-dimensional drawing of the unbalanced shaft assembly

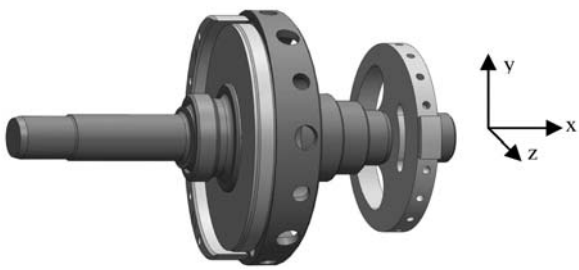

Fig. 12 Balanced shaft and its associated parts assembly

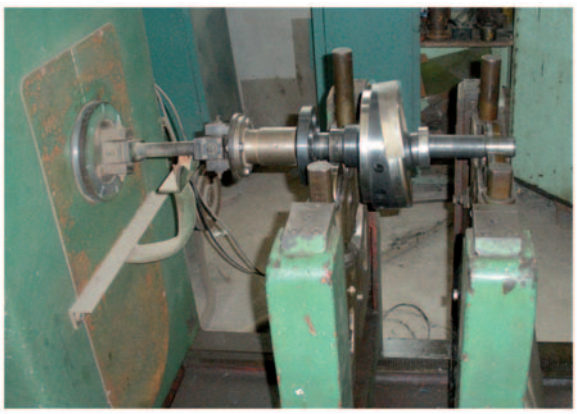

Fig. 13 Balance test of the shaft assembly on a dynamic balancing machine

Table 3 Dynamic balancing test result for the shaft assembly

	Unbalance level	
Correction face	Additional mass (g)	Phase angle (°)
The left	1.745	146
The right	3.843	210

due to its great unbalance level and the experiment had to be stopped for safety. However, the shaft assembly after it is balanced could rotate smoothly on the flexible support of the machine.

Taking z axis in Fig. 12 as the origin of phase angle, and the outer lanes of the eccentric disc and the swash plate as the left and the right correction faces, respectively, the test result was listed in Table 3. It shows that 1.745 g mass at 146° on the left correction face and 3.843 g mass at 210° on the right should be added to achieve complete dynamic balance. However, the unbalance values are too small for the shaft assembly to produce any bad influences to the seawater hydraulic pump, so further work is unnecessary considering the economic cost. The experiment testified that the method of using Solidworks software for the dynamic balancing design of a complex shaft was feasible and effective.

5 TEST RIG

To get the performances of the developed seawater hydraulic pump, a seawater hydraulic components test rig was used, as shown in Figs 14 and 15. In Fig. 14, the seawater hydraulic pump 5 is driven by an electric motor 3 through an integrated torquemeter and tachometer 4 which can measure the output torque and speed of the motor, the motor speed can be adjusted by a frequency converter. Pressure gauge 7 and flow meter 12 are used to measure the output pressure and flowrate of the pump, respectively, and further the output power of the pump can be obtained. The safety valve 8 and relief valve 9 are used to set the safety working pressure and normal working pressure of the system, respectively, throttle valve 10 is used to adjust the flowrate of one branch in the circuit when testing other hydraulic components. The directional control valve 11 is mainly to produce flowrate step signal for the hydraulic components when their dynamic performances are tested. Therefore, the test rig is flexible for the static and dynamic performance experiments for many kinds of water hydraulic components. The rated pressure and rated flowrate of the test rig are 21 MPa and 200 L/min, respectively. Filters 2 and 6 have precision of 120 and 40 μm, respectively.

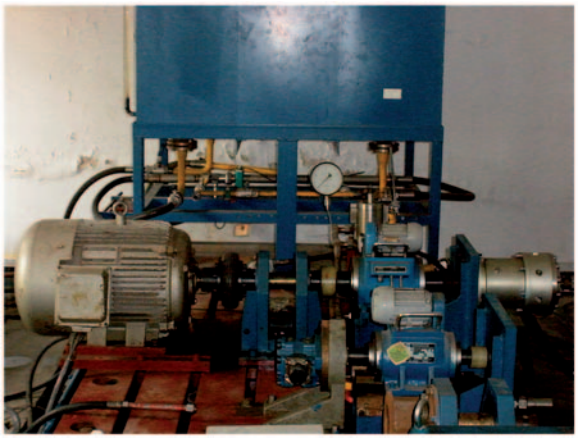

Fig. 14 Picture of seawater hydraulic components test rig

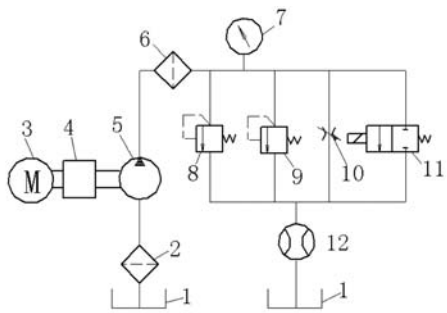

1-water tank 2-inlet filter 3-electric motor 4-torquemeter and tachometer

5-seawater hydraulic pump 6-outlet filter 7-pressure gauge 8-safety valve

9-relief valve 10-throttle valve 11-2/2 way directional control valve

12-flow meter

Fig. 15 Schematic diagram of seawater hydraulic components test system

In addition, the fluid in the test system was made of artificial seawater prepared according to the ASTM Standard D 1141-98 [**7**], and its chemical composition is listed in Table 4.

6 PERFORMANCES TEST

The performances of the developed seawater hydraulic pump were conducted on the test rig. Figure 16 shows the efficiency test results when the electric motor was set to 50 Hz frequency at which its corresponding synchronous speed was 750 r/min. Its volumetric efficiency was 96 per cent, mechanical efficiency 84 per cent, and overall efficiency 81 per cent at 10 MPa rated pressure. At 14 MPa maximum pressure, its volumetric efficiency, mechanical efficiency, and overall efficiency were 94 per cent,

91 per cent, and 86 per cent, respectively. The volumetric efficiency of the pump under different pressures and rotation speeds is given in Fig. 17. It can be seen from Fig. 17 that the volumetric efficiency of the pump increased with the increasing rotation speed and decreased with the increasing output pressure.

Apart from the basic performances experiment, 300-h reliability test for the pump at 10 MPa rated pressure and speed of 750 r/min was also completed, as shown in Fig. 18. The output flow of the pump appeared slowly by decreasing tendency with time period, and the total flowrate reduction was 4 per cent, which illustrated that its performance had no obvious decline after reliability test.

By disassembling the seawater hydraulic pump after the test, no damage and excessive wear could be found for all the moving parts in the pump, especially for the newly designed piston and sleeve pairs. Figure 19 shows the clearance variation between each pair of piston ball and shoe before and after the reliability test. The maximum clearance variation happened on piston with number 6 was no more than 20 μm. The result illustrates that all the piston ball and shoe friction pairs in the pump were worn but not seriously. The wear rate of each pair of piston ball and shoe seems to exist a certain relationship with its original clearance, that the bigger the original clearance, the higher its wear rate. This may be caused by the impact effect between the piston ball and the shoe.

The test results show that the developed pump can basically meet the requirements of the seawater hydraulic power pack for underwater tools, and it had been put into application.

7 DISCUSSION

The method of solving the unbalance problem of the shaft assembly presented in this article was verified to be effective, but not complete to the pump. Because when the pump is working under a certain pressure, the unbalanced and periodically changed lateral force

Table 4 Chemical composition of artificial seawater, according to ASTM standard D1141-98 (ASTM, 1998)

Compound	NaCl	$MgCl_2$	Na_2SO_4	$CaCl_2$	KCl	$NaHCO_3$	KBr	H_3BO_3	$SrCl_2$	NaF
Concentration (g/L)	24.5	5.20	4.09	1.16	0.695	0.201	0.101	0.027	0.025	0.003

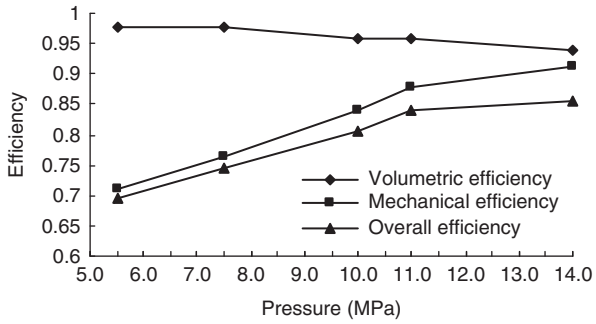

Fig. 16 Efficiency of the seawater hydraulic pump

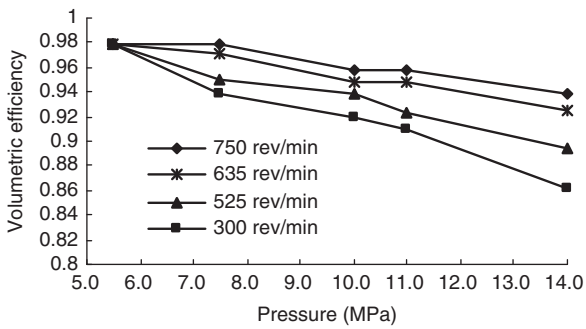

Fig. 17 Volumetric efficiency of the seawater hydraulic pump under different pressures and rotation speeds

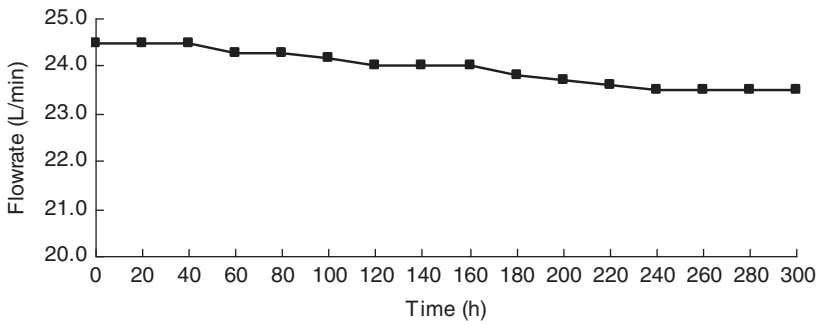

Fig. 18 Reliability test result of the seawater hydraulic pump

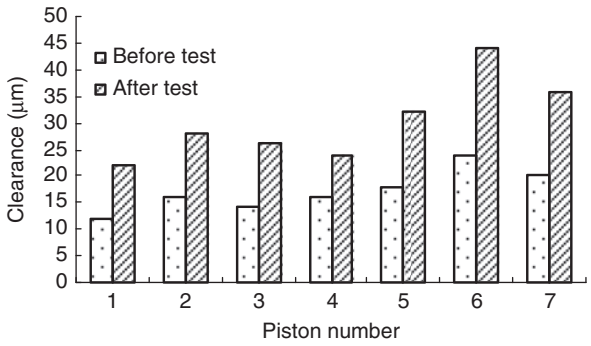

Fig. 19 Clearance variation between each pair of piston ball and shoe before and after reliability test

on the shaft caused by the pistons in high-pressure region will still produce vibration, noise, and damage to the bearings, and further negative effect to the pump's service life. Therefore, the next research should consider the shaft balance problem under load.

The increasing clearance between piston ball and shoe will make the piston's effective stoke shorten and bring mechanical impact to each other. The wear of the Glyd rings will directly cause the leakage flow increased. Both of them have great influence to the pump's efficiency and reliability. Hence, it is necessary to continue the reliability test with more time period and with different materials or material combinations for comparison.

In addition, the test for the pump with 'dirty seawater' that can simulate the marine environment, should also be carried out in future research to verify its anti-contamination performance.

8 CONCLUSION

In this study, a seawater hydraulic pump with check valves and oil–water-separated structure was designed for an underwater tool system. A novel 'anti-loosening' piston structure was proposed for improving its reliability while high friction existing between the piston and sleeve pairs, which made it possible to select non-plastic materials with high strength and hardness for piston balls and shoes. Hence, it can be adopted in other types of piston pumps. Advanced engineering materials and processing methods were also applied to the piston and sleeve pairs and helped to improve their anti-wear and anti-corrosion performances under seawater lubrication.

Based on Solidworks software, a new method was brought out to solve the unbalance problem of the shaft assembly in the pump, which was verified by experiment to be feasible and effective. The methodology can be used to other rotating machines with complex shafts.

Experimental results show that the developed pump has good performances. After 300 h durable test, neither obvious performance degradation nor excessive wear happened to the pump, which illustrates that the design of the seawater hydraulic pump and the novel piston structure are satisfactory.

FUNDING

This work was financially supported by the National Key Technology R&D Program of China [grant number 2006BAF01B03-02].

ACKNOWLEDGEMENTS

The authors appreciated Mr Zhuangyun Li, Lizhi Zhao, Liang Luo, Liang Luo, Wei Chen, and others for their contributions to this project.

© Authors 2011

REFERENCES

1 **Black, S. A.** and **Kuehler, W. D. Jr.** The development of a seawater hydraulic vane motor. In Proceedings of the National Conference on *Fluid power: 37th annual meeting*, Chicago, USA, 21–23 October 1981, vol. 35, pp. 111–118.
2 **Brookes, C. A., Fagan, M. J., James, R. D., Kerry, P.,** and **McConnachie, J.** The development of water hydraulic pumps using advanced engineering ceramics. In Proceedings of the 4th Scandinavian International Conference on *Fluid power*, Tampere, Finland, 26–29 September 1995, pp. 965–977.
3 **Drabls, L. S.** Testing of DanfossAPP1.0-2.2 with APP pumps as water hydraulic motors for energy recovery. *Desalination*, 2005, **183**, 41–54.
4 **Terävä, J., Kuikko, T.,** and **Vilenius, M.** Development of seawater hydraulic power pack. In Proceedings of the 4th Scandinavian International Conference on *Fluid power*, Tampere, Finland, 26–29 September 1995, pp. 978–991.
5 **Kitagawa, A.** Co-operation between universities and water hydraulic companies in Japan. In Proceedings of the 6th Scandinavian International Conference on *Fluid power*, Tampere, Finland, 26–28 May 1999, vol. 2, pp. 35–50.
6 **Van der Wijk, V., Herder, J. L.,** and **Demeulenaere, B.** Comparison of various dynamic balancing principles regarding additional mass and additional inertia. *J. Mech. Rob.*, 2009, **1**, 1–9.
7 **ASTM-D1141-98.** Standard practice for the preparation of substitute ocean water. In *Annual book of ASTM standards*, 2004 (American Society for Testing and Materials, Philadelphia, Pennsylvania, USA).

APPENDIX 1

Notation

I	tensor of inertia of the shaft assembly (g mm^2)
I_{xx}	moment of inertia relative to the x axis (g mm^2)
I_{xy}	product of inertia of the shaft assembly at x–y coordinate plane (g mm^2)
I_{xz}	product of inertia of the shaft assembly at x–z coordinate plane (g mm^2)
I_{yx}	product of inertia of the shaft assembly at y–x coordinate plane (g mm^2)
I_{yy}	moment of inertia relative to the y axis (g mm^2)
I_{yz}	product of inertia of the shaft assembly at y–z coordinate plane (g mm^2)
I_{zx}	product of inertia of the shaft assembly at z–x coordinate plane (g mm^2)
I_{zy}	product of inertia of the shaft assembly at z–y coordinate plane (g mm^2)
I_{zz}	moment of inertia relative to the z axis (g mm^2)