University of Wollongong
Research Online

Faculty of Engineering - Papers (Archive)

Faculty of Engineering and Information Sciences

2012

Field monitoring of performance of ballasted rail track with geosynthetic reinforcement

P Anantanasakul
University of Wollongong, pongpipa@uow.edu.au

B Indraratna
University of Wollongong, indra@uow.edu.au

S S. Nimbalkar
University of Wollongong, sanjayn@uow.edu.au

T Neville
Australian Rail Track Corporation Ltd

http://ro.uow.edu.au/engpapers/4437

Publication Details

Anantanasakul, P., Indraratna, B., Nimbalkar, S. S. & Neville, T. (2012). Field monitoring of performance of ballasted rail track with geosynthetic reinforcement. In G. A. Narsilio, A. Arulrajah & J. Kodikara (Eds.), 11th Australia - New Zealand Conference on Geomechanics: Ground Engineering in a Changing World (pp. 241-246). Australia: Engineers Australia.

Research Online is the open access institutional repository for the University of Wollongong. For further information contact the UOW Library: research-pubs@uow.edu.au

Field Monitoring of Performance of Ballasted Rail Track with Geosynthetic Reinforcement

P. Anantanasakul[1], B. Indraratna[2], S. S. Nimbalkar[3] and T. Neville[4]

[1]Research Fellow, School of Civil, Mining and Environmental Engineering, Faculty of Engineering, University of Wollongong, NSW 2522; PH (61) 2- 4221-4588; FAX (61) 2-4221-3238; email: pongpipa@uow.edu.au
[2]Professor, School of Civil, Mining and Environmental Engineering, Faculty of Engineering, University of Wollongong, NSW 2522; PH (61) 2- 4221-3046; FAX (61) 2-4221-3238; email: indra@uow.edu.au
[3]Research Fellow, School of Civil, Mining and Environmental Engineering, Faculty of Engineering, University of Wollongong, NSW 2522; PH (61) 2- 4221-3385; FAX (61) 2-4221-3238; email: sanjayn@uow.edu.au
[4]Senior Geotechnical Engineer, Australian Rail Track Cooperation Ltd, Broadmeadow, NSW 2292; PH (61) 2-4941-9665; FAX (61) 2-4941-9738; email: tneville@artc.com.au

ABSTRACT: Large cyclic stresses induced from heavy traffic can cause significant degradation of rail tracks, leading to poor track geometry and safety. Inclusion of resilient materials such as geosynthetics to reinforce the track substructure has been observed in the laboratory to be viable at reducing the impact of such adverse effects. Despite this, the 'field' performance of different geosynthetics to reinforce ballasted tracks has not been investigated in a systematic manner. An extensive field study was therefore undertaken on experimental track sections near Singleton, New South Wales. Four types of geosynthetics were installed at the ballast-subballast interface of track sections constructed on subgrades with three distinctly different values of stiffness. It was found that geogrids can decrease vertical strains of the ballast with obvious benefits of improved track stability and reduced maintenance cost. It was also found that a few selected types of geogrids can be effectively used for soft subgrade soils.

Keywords: geosynthetic, reinforcement, ballasted track, track deformation, stress

INTRODUCTION

Ballasted rail tracks serve as ones of the major infrastructures for freight and passenger transport in Australia. In the past decade, an increasing demand for such transport has led to the use of considerably heavier and faster trains. According to past research conducted by McDowell and Harireche (2002), Indraratna and Salim (2003) and Lackenby et al. (2007), among others, large cyclic stresses due to heavier and faster trains can induce large deformations and degradation of the ballast layer. This, in turn, adversely affects track stability and causes serious implications on track maintenance.

It has been observed from several laboratory studies (Rowe and Jones 2000, Shin et al. 2002, Brown et al. 2007 and Indraratna et al. 2011) that layers of resilient materials such as geosynthetics when placed in the track substructure can increase stability and therefore longevity and serviceability of ballasted rail tracks. However, only a few studies have investigated the benefits of geosynthetic reinforcement under 'field' conditions. Among these studies, Indraratna et al. (2010) performed a field trial on a track, in which layers of geocomposite were installed at the ballast-subballast interface. They reported considerably smaller vertical and horizontal strains of the ballast layer for the reinforced track part.

However, the 'field' performance of different geosynthetics used as reinforcing elements for ballasted tracks has not been investigated in a systematic manner. The present study was undertaken to fill this gap. Nine fully instrumented experimental track sections were constructed near the city of Singleton, New South Wales. These track sections were built on three subgrades with distinctly different values of stiffness, and four types of geosynthetics were installed at the ballast-subballast interface. Permanent and transient strains of ballast, breakage of particles and variation of vertical stresses in the track substructure were routinely monitored. This paper presents the details of field instrumentation and monitoring process for this unique research project. Preliminary field monitoring results are also discussed.

DETAILS OF EXPERIMENTAL TRACK SECTIONS

The experimental track sections were part of the Third (Up Relief) Track of the Minimbah Bank Stage 1 Line that extends from Bedford (chainage 224.20 km) to Singleton (235.06 km), New South Wales.

The Third Track was constructed between July 2009 and May 2010 to decrease frequent traffic congestions on the First and Second Tracks. The two old tracks are adjacently located on the down rail side of the Third Track. The Minimbah Bank Stage 1 Line is owned and operated by the Australian Rail Track Corporation (ARTC). It is mainly used to transport coal from mines in the Hunter Valley to the Port of Newcastle. The line also supports CityRail's passenger trains servicing between Maitland and Scone.

An extensive subsurface exploration program consisting of 33 bore holes and 107 test pits indicates that the Third Track is located on a massive sedimentary rock outcrop between 224.20 to 229.00 km and on the flood plain of the nearby Hunter River thereafter (RCA Australia 2008). The rock outcrop is part of the Branxton Formation and mainly composed of medium to high strength siltstone. The flood plain is composed of a layer of alluvial silty clay deposit 7-10 m thick underlain by heterogeneous layers of medium dense sand and silty clay with a total thickness of 7-9 m. Medium strength siltstone similar to the first part of track is found beneath the sand-silty clay layer.

The construction of Third Track mainly involved cutting (blasting) into the siltstone outcrop at various locations on the first part of track to obtain design rail levels. When exposed, the particular siltstone was highly weathered and disintegrated into clayey-silty gravels. As such, the cut (blasted) surfaces formed a 'transition' layer of clayey-silty gravel about 100 to 200 mm thick on top of the 'intact' siltstone. The siltstone cuttings (clayey-silty gravel) were used to construct several embankments for the track part on the flood plain, which located at elevations 20-30 m below the rock outcrop. The second track part crossed three natural waterways with continuous flows. At these crossings, reinforced concrete bridges were constructed to support the track.

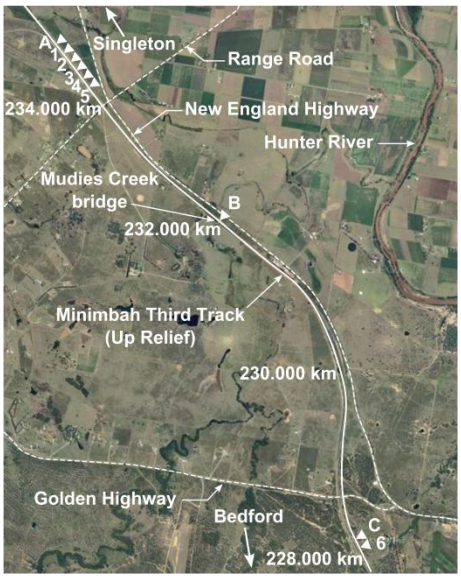

Figure 1: Locations of experimental sections on Minimbah Third (Up Relief) Track.

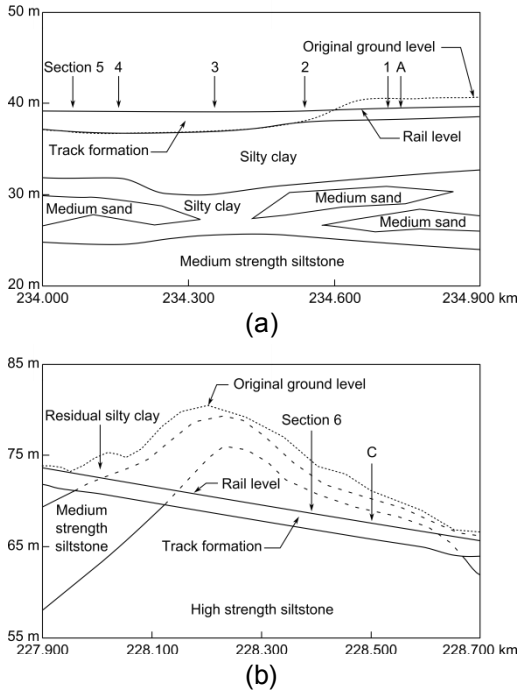

Figure 2: Profiles of subsurface conditions of experimental sections

The Third Track's substructure consisted of steel rails on reinforced concrete sleepers. A ballast layer (GP, angular latite basalt fragments, D_{50} = 36 mm) extended 300 mm below the sleepers and was underlain by a 150 mm thick subballast layer (GP-GM, compacted sandy gravel, CBR = 50%, D_{50} = 4 mm). A structural fill layer of 700 mm thickness (GP-GM, compacted sandy gravel, CBR 8%, D_{50} = 3 mm) was placed below the subballast layer. The materials used for ballast, subballast and structural fill were obtained from the same quarry (20 km northwest of Singleton) and composed of similar mineral components. The higher CBR value of the subballast compared to the structural fill was due to larger degrees of compaction. For the first part of track, the structural fill was underlain by the 'transition' layer followed by the siltstone as per the reason discussed earlier. For the second part of track, the structural fill of the first four kilometres was underlain by a layer of general fill which was essentially the embankments constructed from the siltstone cuttings and followed by the original

alluvial silty clay. For the rest of track, the structural fill was placed directly on the original alluvial silty clay deposit. The ballast layer of the track on the three bridges was underlain by concrete decks.

Track Reinforcement using Geosynthetics

Nine experimental sections were included in the Third Track during the time of track construction. At these sections, different types of geosynthetics were installed inside the track to study their potential benefits at improving the overall track stability. Since one of the key research objectives was to evaluate the performance of these reinforcing geosynthetics on tracks with varying subgrade stiffness, parts of the Third Track on subgrades with three distinctly different values of stiffness were identified and selected. The three subgrades were a) the relatively soft general fill and alluvial silty clay deposit, b) the intermediate siltstone and c) the stiff reinforced concrete bridge deck. Fig. 1 shows the locations of experimental sections on different parts of the Third Track. Sections 1-5 and Section A were located on the general fill and alluvial silty clay deposit, whereas Section B was located on the concrete deck of Mudies Creek bridge. As also shown in the figure, Sections C and 6 were located on the cut siltstone. Profiles of the subsurface conditions of all sections, except B are shown in Fig. 2.

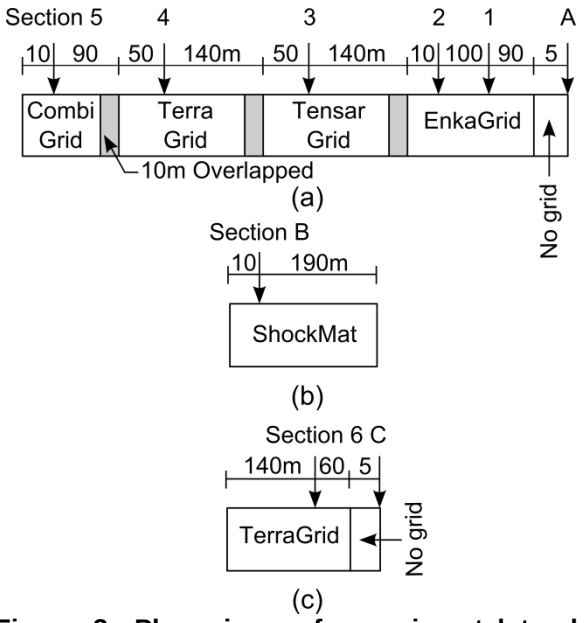

Figure 3: Plan views of experimental track sections reinforced with different types of synthetic materials.

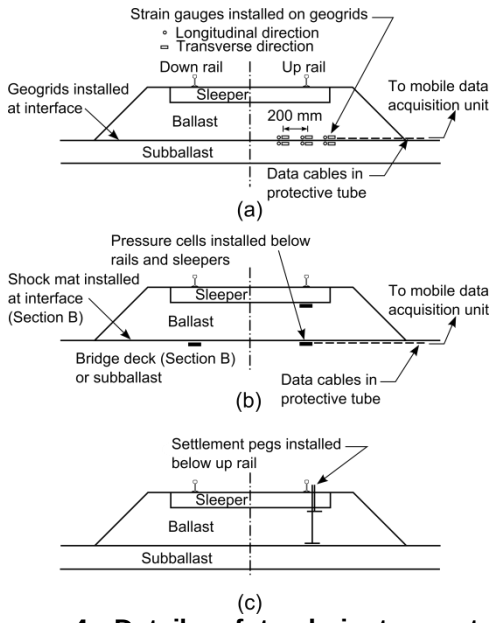

Figure 4: Details of track instrumentation using (a) strain gauges, (b) pressure cells and (c) settlement pegs.

Recent laboratory studies conducted by Brown et al. (2007) and Indraratna et al. (2007) have shown that the effectiveness of geogrid reinforcement to increase the overall stability of ballast depends mainly on the stiffness and aperture size of geogrids. An increase in geogrid stiffness by 50% has been observed to result in about 20% smaller ballast vertical strains, while the aperture sizes providing best interlocking between geogrids and ballast particles between 1.1 and 1.7 of the D_{50} of ballast has been reported. Rowe and Jones (2000) and Indraratna and Salim (2003) also reported better stability of ballast when geocomposites were used. This was reasoned to be the combined effects of reinforcement from the geogrid component and filtration from geotextile. Geotextiles when used as filter materials in rail tracks have been observed to prevent fine particles from the saturated subballast layer and subgrade from moving up and fouling the ballast layer. Fouling can significantly decrease the internal friction of ballast particles, thus resulting in larger vertical strains and lateral spreading of the ballast layer. To investigate such influential factors on the effectiveness of geosynthetic reinforcement under 'field' conditions, three types of commercially available geogrids with different values of stiffness and aperture sizes and one geocomposite were selected and employed in this study.

Fig. 3 shows different types of geosynthetics installed at the experimental sections. Single layers of EnkaGrid, TensarGrid and TerraGrid (all geogrids) were installed at the ballast-subballast interface in Sections 1, 2, 3 and 4, respectively. A single layer of CombiGrid (geocomposite) was also installed at the ballast-subballast interface at Section 5, while a layer of TerraGrid was installed at Section 6. For

comparison purposes, no geosynthetic was installed at Sections A and C. According to the Australian construction standard, ballast is not placed directly on stiff reinforced concrete slabs, but rather on cushion layers inserted in between them. Thus, a layer of ShockMat (synthetic mat) was installed at the ballast-deck interface at Section B (Fig. 3b) to minimise particle degradation. The geosynthetics employed in this study are widely used in Australia and their pertinent properties are listed in Table 1. Note that Table 1a reports the values of properties of the geogrids in the machine direction followed by those of the cross-machine direction.

Table 1: Mechanical properties of (a) geogrids and geocomposite and (b) synthetic mat.

	TerraGrid	TensarGrid	EnkaGrid	CombiGrid	
Material	Polyester	Polyester	Polyester	Polypropelene (grid)	Polypropelene (fabric)
Type	biaxial	biaxial	biaxial	biaxial	nonwoven
Tensile strength (kN/m)	30/30	30/30	36/36	40/40	6/10
Strain at break (%)	15/15	15/15	15/15	15/15	60/40
Aperture size (mm)	40/40	65/65	44/44	31/31	-
Thickness (mm)	4	3	3	3	2.9

(a)

	ShockMat
Material	Polyurethane elastomer
Type	bonded rubber granulates
Particle size (mm)	1-3
Tensile strength (kN/m^2)	600
Strain at break (%)	80
Thickness (mm)	10

(b)

TRACK INSTRUMENTATION

Strain gauges were used to study deformations and mobilised forces along the geogrid layers. The strain gauges were of post-yield type and suitable to measure strains in the range of 0.1 to 15%. The strain gauges were installed, in group, on the top and bottom sides of grids in both longitudinal and transverse directions as shown in Fig 4a. At each section, one group of strain gauges was installed below the edge of sleeper while another was below the up rail. The distance between two adjacent groups was about 200 mm. The installation of strain gauges on geogrids was made at the University of Wollongong, and the instrumented geogrids were later transported and installed at predetermined locations at the time of track construction. Several layers of coating were used to protect the strain gauges, thus minimising damage caused by harsh contacts with ballast particles during the subsequent testing. Fig. 5a shows groups of strain gauges on a geogrid at the time of grid installation.

Transient vertical stresses in the track were monitored by pressure cells that are suitable to measure compressive pressures up to 600 kPa. As shown in Fig. 4b, two pressure cells were installed at Sections 1, 6, A and C. One pressure cell was installed at the sleeper-ballast and another at the ballast-subballast interface. To install these pressure cells, the ballast was removed. The cells were placed on the subballast layer (Fig. 5b) and ballast particles were then backfilled. At Section B however, three pressure cells were installed at the synthetic mat-deck interface. Two cells were below the up rail while the other was below the down rail. At the time of track construction, the three pressure cells were placed on the concrete deck at predetermined locations. They were then covered by a synthetic mat then followed by ballast.

(a)

(b)

Figure 5: Installation of (a) strain gauges and (b) pressure cells to monitor response of track substructure under repetitive wheel loads.

Output signals from the strain gauges and pressure cells were amplified and filtered as necessary to reduce signal noises. The ‘conditioned’ signals were then converted into a digital format and later

stored in a dedicated data acquisition (mobile) computer. The amplification, filtering and conversion of signals were performed through a National Instrument data acquisition unit model DAQ 9188. A 12 V automotive battery served as power supply for the data acquisition unit and mobile computer.

Settlement pegs were installed to measure vertical deformations of the ballast layer. The settlement pegs were installed at the sleeper-ballast and ballast-subballast interfaces (Fig. 4c). Installation of the settlement pegs involved removing and backfilling of ballast. A simple survey technique was used to periodically monitor the movements of pegs, and vertical settlements of the ballast layer were determined. Signals from the strain gauges and load cells as well as levels of the settlement pegs were obtained immediately after the instruments were installed. Later on, data were obtained daily for three days, weekly for three weeks, monthly for three months and quarterly thereafter.

PRELIMINARY EXPERIMENTAL RESULTS

Settlements of Ballast Layer

The settlements ( ) and vertical strains ( ) of ballast layer at 90 days after track commission are reported in Table 2. During this period, the track underwent a total traffic tonnage of 27 million gross tons. The majority of traffic on the track was from four-axle wagons with an axle load of 30 tons, and this resulted in a number of load cycles of 2.3×10^5 at 90 days after the commission of track. When the results for sections on similar subgrades are compared, the vertical settlements of sections with reinforcement are, in general, smaller than those without reinforcement. This phenomenon is similarly observed in the laboratory and is mainly attributed to the interlocking between ballast particles and grids, thus creating larger track confinement.

Table 2: Vertical settlements and strains of ballast layer at 90 days after track commission (compression is positive).

Section	1	2	3	4	5	6	A	B	C
Subgrade	silty clay	silty clay	fill	fill	fill	rock cutting	silty clay	concrete deck	rock cutting
Reinforcement	EnkaGrid	EnkaGrid	TensarGrid	TerraGrid	CombiGrid	TerraGrid	none	none	ShockMat
(mm)	16.3	21.2	20.6	14.8	16.0	16.3	23.8	8.8	17.8
(%)	5.4	7.1	6.9	4.9	5.3	5.4	7.9	2.9	5.9

When the results for sections with similar geogrids are compared, it is observed that the effectiveness of reinforcement of a geogrid to reduce track settlement becomes higher for softer subgrades. Such an observation is in agreement with the results of full–scale tests presented by Ashmawy and Bourdeau (1995). It is observed that among the four synthetic types used TerraGrid performed most effectively. Although the tensile strength of TerraGrid is equal or lower than those of the others, its aperture size (40 mm) would enable better interlocking between the ballast particles and grids. This finding agrees well with the criteria for optimum aperture sizes for reinforcing geogrids proposed by Indraratna et al. (2011).

Transient Vertical Stresses

The vertical stresses due to the passage of trains with an axle load of 30 tons travelling at 40 km/hr were about 280 kPa at Section B (mat-deck interface) and in the range of 30 to 40 kPa at Sections 1, 6, A, and C (ballast-subballast interface). The vertical stresses at the sleeper-ballast interface of the latter sections were found to be in the range of 170 to 190 kPa. These results indicate that the induced stresses were considerably larger in a track with stiffer subgrade. The larger stresses also suggest higher degrees of breakage of the individual ballast particles. No consistent relationship between variation of induced stresses and types of geosynthetics, however, was observed in this study.

Strains Mobilized in Synthetic Grids

Accumulated longitudinal ( ) and transverse ( ) strains at 90 days after track commission (2.3×10^5 load cycles) measured from the strain gauges installed below the edges of sleepers are given in Table 3. The transverse (tensile) strains were generally larger than longitudinal strains. This is attributed to the relative ease for lateral spreading of the track substructure caused by smaller track restraints in

the transverse direction. It was also observed that the values of and are mainly influenced by the deformations of subgrade. As shown in Table 3, the strains of CombiGrid (Section 5) were relatively large although its higher stiffness could have resulted in smaller strains. This is because the thick general fill at this location underwent large lateral deformations shortly after track commission, resulting in the excessive transverse strains in the geocomposite.

Table 3: Accumulated longitudinal and transverse strains in geosynthetics at 90 days after track commission (compression is positive).

Section	1	2	3	4	5	6
Subgrade	silty clay	silty clay	fill	fill	fill	rock cutting
Reinforcement	EnkaGrid	EnkaGrid	TensarGrid	TerraGrid	CombiGrid	TerraGrid
(%)	-0.80	-0.78	-0.92	-0.61	-0.60	-0.62
(%)	-0.85	-1.50	-0.85	-0.80	-1.80	-0.85

Induced transient strains in both longitudinal ( ) and transverse ( ) directions due to the passage of trains with an axial load of 30 tons travelling at 40 km/hr were in the magnitude of 0.14-0.17%. Unlike the case of accumulated strains, smaller values of and were observed in grids with higher values of stiffness.

CONCLUSIONS

Fully instrumented track sections were constructed to study the 'field' performance of various geosynthetics to improve the overall stability of rail tracks. Geosynthetics were installed at the ballast-subballast interface and the experimental sections were located on subgrades with distinctly different values of stiffness. Settlements of ballast, vertical stresses in track and strains developed in the geosynthetics were monitored. It was found that geogrids could decrease vertical strains of the ballast with obvious benefits of improved track stability and reduced maintenance cost. The effectiveness of geosynthetics appeared to increase as the stiffness of subgrade decreased. The strains accumulated in geogrids were influenced by subgrade deformation, while the induced transient strains were mainly affected by the stiffness of geogrids. The findings of this field study will allow for more accurate assessment of the performance of geosynthetic reinforcement to mitigate track degradation caused by cyclic and impact traffic loads. Better understanding of such performance would allow for safer and more effective design and analysis of ballasted rail tracks with geosynthetic reinforcement.

ACKNOWLEDGEMENT

This study was funded by CRC for Rail Innovation, ARTC and RailCorp through grant R3.117. The financial support is gratefully acknowledged.

REFERENCES

Ashmawy, A. K. and Bourdeau, P. L. (1995). "Geosynthetic-reinforced soils under repeated loading: a review and comparative design study." Geosynthetics International, 2(4), 643-678.

Brown, S. F., Kwan, J. and Thom, N. H. (2007). "Identifying the key parameters that influence geogrid reinforcement of railway ballast." Geotextiles and Geomembranes, 25(6), 326-335.

Indraratna, B. and Salim, W. (2003). "Deformation and degradation mechanics of recycled ballast stabilised with geosynthetics." Soils and Foundations, 43(4), 35-46.

Indraratna, B., Shahin, M. A. and Salim, W. (2007). "Stabilising granular media and formation soil using geosynthetics with special reference to Railway engineering." Ground Improvement, 11(1), 27-44.

Indraratna, B., Nimbalkar, S., Christie, D., Rujikiatkamjorn, C. and Vinod, J. S. (2010) "Field assessment of the performance of a ballasted rail track with and without geosynthetics." Journal of Geotechnical and Geoenvironmental Engineering, ASCE, 136(7), 907-917.

Indraratna, B., Hussaini, S. K. and Vinod J. S. (2011). "On the shear behaviour of ballast-geosynthetic interfaces." Geotechnical Testing Journal, ASTM (accepted, in press).

Lackenby, J., Indraratna, B. and McDowel, G. (2007). "The role of confining pressure on cyclic triaxial behaviour of ballast." Geotechnique, 57(6), 527-536.

McDowell, G. R. and Harireche, O. (2002). "Discrete element modelling of soil particle fracture." Geotechnique, 52(2), 131-135.

RCA Australia (2008). "Geotechnical investigation report for Minimbah Bank Third Track." RCA Australia, Newcastle, Australia.

Rowe P. K. and Jones C. P. (2000). "Geosynthetics: innovative materials and rational design." Proceedings of GEOENG 2000, Melbourne, Australia, 1124-1156.

Shin E. C., Kim D. H. and Das B. M. (2002). "Geogrid-reinforced railroad bed settlement due to cyclic load." Geotechnical and Geological Engineering, 20(3), 261-271.