University of Wollongong
Research Online

Faculty of Engineering - Papers (Archive)

Faculty of Engineering and Information Sciences

2011

# MR Damper in Reducing Pounding Effect of Base-Isolated RC Highway Bridge

M Neaz Sheikh
*University of Wollongong*, msheikh@uow.edu.au

Jingya Xiong
*China*

Weihua Li
*University of Wollongong*, weihuali@uow.edu.au

## Publication Details

Sheikh, M. Neaz., Xiong, J. & Li, W. (2011). MR Damper in Reducing Pounding Effect of Base-Isolated RC Highway Bridge. In K. McCue & S. Anderson (Eds.), AEES Conference 2010 Australia: Australian Earthquake Engineering Society.

Research Online is the open access institutional repository for the University of Wollongong. For further information contact the UOW Library: research-pubs@uow.edu.au

Australian Earthquake Engineering Society 2010 Conference, Perth, Western Australia

# MR Damper in Reducing Pounding Effect of Base-Isolated RC Highway Bridges

**M. Neaz Sheikh[1], Jingya Xiong[2], and Weihua Li[3]**

1. Senior Lecturer, School of Civil, Mining and Environmental Engineering, University of Wollongong, NSW 2522, Australia. Email: msheikh@uow.edu.au

2. Postgraduate student, School of Civil, Mining and Environmental Engineering, University of Wollongong, NSW 2522, Australia.

3. Associate Professor, School of Mechanical, Materials and Mechatronic Engineering, University of Wollongong, NSW 2522, Australia. Email: weihuali@uow.edu.au

## Abstract

Significant structural damage due to pounding between adjacent superstructures of multi-span reinforced concrete (RC) highway bridges has been observed in past earthquakes. Different methods have been proposed in the literature to mitigate the adverse pounding effect. This paper presents an analytical investigation on the use of magnetorheological (MR) dampers in reducing the pounding effect of base-isolated multi-span RC highway bridges. It has been observed that MR damper can effectively reduce adverse pounding effect. Three control strategies (passive off, passive on, and bang bang control) of MR damper have been investigated. Although all the control strategies are found to be effective, the bang bang control has been observed to be the most effective.

**Keywords:** MR damper, pounding, highway bridges, control strategies, earthquakes

## 1. INTRODUCTION

Bridges are considered one of the most critical components of highway transportation networks, as closure of a bridge due to partial damage or collapse can disrupt the total transportation system. However, earthquakes in the past few decades around the world have demonstrated the vulnerability of engineered bridges even in the event of a moderate earthquake.

In general, bridges lack structural redundancy and hence suffer severe damage which leads to failure during earthquakes. A more robust bridge design is not considered economical or even effective, unless earthquake induced forces in the structure are reduced by means of seismic isolation. Seismic isolation devices generally used in the bridge decouple the bridge deck from the bridge substructure and hence reduce seismic forces transmitted to abutments and piers. However, in the event of a moderate to strong earthquake ground motion, the displacement demand at the expansion joint of a base-isolated multi-span bridge can be many times higher than the clearance between the decks. The phenomenon is commonly known as seismic pounding. Pounding has been identified as one of the main causes of the initiation of damage and may change the seismic response of the entire bridge.

A number of studies have been conducted to investigate the effectiveness of structural control devices in reducing the pounding effect of bridges. Jankowski et al. (2000) investigated the use of dampers and stiffeners, rubber bumpers, crushable devices, and shock transmission units to mitigate the pounding effect. Zhu et al. (2004) further investigated the effectiveness of such control devices by 3D non-linear modelling of a three span elevated steel bridge and observed 50% reduction in structural response. However, proposed control devices make the bridge decks continuous and may place high force demand at bridge piers.

The magnetorheological (MR) damper, a semi active control device, has recently been found to be effective, based on both analytical and experimental investigation, to reduce the vibration of structures under earthquake induced ground motions (Sireteanu and Stammers, 2000; Spencer et al., 1997). The MR damper is an intelligent device which can adjust its damping parameters by altering the magnetic field in the MR fluid. Guo and Li (2008) investigated the possibility of using MR dampers to reduce the pounding effect of adjacent segments of highway bridges in extreme earthquake events. They designed MR damper to trace the instantaneous optimal control forces for manipulating the dampers. Later, Guo et al. (2009) carried out both analytical and experimental investigations (shaking table tests) on a 1:20 scaled base-isolated bridge model and proposed an optimization approach for MR dampers which can effectively reduce seismic pounding effect.

The aim of this paper is to investigate whether MR dampers with simple control strategies can effectively reduce the pounding effect of base-isolated multi-span RC highway bridge. A three- segment base isolated multi-span highway bridge has been modelled using MATLAB SIMULINK. Three simple control strategies namely, Passive off, passive on and bang bang control strategies have been investigated. It has been observed that even simple control strategies can be effective in reducing the forces generated due to pounding of adjacent superstructure segments.

## 2. MODELLING FOR POUNDING OF BASE-ISOLATED RC HIGHWAY BRIDGE

### 2.1 Modelling assumptions

The base-isolated highway bridge analysed in this study consists of flexible bearings with stiff piers (Section 4.1) whose stiffness is significantly higher than the stiffness of flexible bearings. The contribution of bridge piers to the dynamic response of the bridge is considered small and hence not considered. The spatial variation of earthquake ground motion is not considered critical, as the studied bridge is not very long. Also, multi-support ground motion is not considered critical for this not very long bridge. Hence, the pounding effect is considered arising from the dynamic characteristics of the bridge segments. The pounding effect between the superstructure and abutment is considered beyond the scope of the paper.

### 2.2 Simplified modelling for pounding between adjacent superstructure segments

Pounding between adjacent superstructure segments of bridges is a complex phenomenon which may involve plastic deformation, friction, local crushing as well as fracture at contact surfaces. Pounding forces act during time lapses that are very small compared to the natural vibration periods of the structures (Vega et al. 2009). Moreover, generated stress waves also propagate into the impacting bodies. Accurate modelling considering the factors described above is complicated and considered not important for the scope of this study. A simplified modelling approach for pounding between adjacent segments is considered sufficient.

Simplified modelling for pounding can be developed adopting either stereo mechanical approach or contact-element approach. The analysis conducted in this study is based on contact-element approach because of its transparency and simplicity in its mathematical formulation. Figure 1 shows a schematic diagram of the bridge pounding model, based on the contact-element approach. It is assumed that the adjacent segments are connected by a linear spring and a damper.

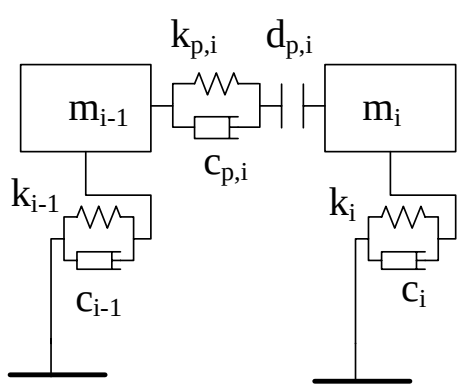


Figure 1: Bridge pounding model based on contact element approach

$K_{p,i}$, $c_{p,i}$, $d_{p,i}$ are the linear stiffness of the contact spring, the linear damping coefficient of the dashpot, and the clearance between the $(i-1)^{th}$ and $i^{th}$ segments, respectively. Under longitudinal ground motion, the response of each segment is independent of each other, unless the relative displacement between the two adjacent segments becomes larger than the

clearance between them, which is the condition of pounding. The relative displacement can be calculated as:

$$\delta_{(i-1,i)}(t) = x_{i-1}(t) - x_i(t) - d_{p,i} \tag{1}$$

Where $\delta_{(i-1,i)}(t)$ is the relative displacement between the (i-1)$^{th}$ segment and the i$^{th}$ segment; $x_{i-1}(t)$ and $x_i(t)$ are the displacements of the (i-1)$^{th}$ segment and the i$^{th}$ segment with respect to the bridge foundation. The pounding force between the colliding superstructures can be expressed as:

$$F_{p,i}(t) = k_{p,i}(t)\delta_{(i-1,i)}(t) + c_{p,i}(t)\dot{\delta}_{(i-1,i)}(t) \quad \text{for } \delta_{(i-1,i)}(t) \geq 0 \tag{2}$$

$$F_{p,i}(t) = 0 \quad \text{for } \delta_{(i-1,i)}(t) < 0 \tag{3}$$

Where $F_{p,i}(t)$ is the pounding force between the *(i-1)$^{th}$* and the *i$^{th}$* segments of the bridge. $\dot{\delta}_{(i-1,i)}(t)$ is the relative velocity between adjacent superstructure segments. The pounding effect is appears only when the adjacent segments are in contact. So the stiffness of the linear impact spring $k_{p,i}(t)$ and the linear impact damping coefficient $c_{p,i}(t)$ are time dependent:

$$k_{p,i}(\mathrm{t}) = \mathrm{k_{p,i}}\ ; \quad \mathrm{c_{p,i}}(\mathrm{t}) = \mathrm{c_{p,i}} \qquad \text{for } \delta_{(i-1,i)}(t) \geq 0 \tag{4}$$

$$k_{p,i}(\mathrm{t}) = 0; \quad \mathrm{c_{p,i}}(\mathrm{t}) = 0 \qquad \text{for } \delta_{(i-1,i)}(t) < 0 \tag{5}$$

The contact stiffness $k_{p,i}$ in equation 2 is taken to be proportional to the axial stiffness of the contact superstructures (Maison and Kasai,1992):

$$k_{p,i} = \frac{E_{i-1,i}\ A_{i-1,i}}{l_{i-1,i}} \tag{6}$$

The $E_{i-1,i}$ is the elastic modulus; $A_{i-1,i}$ is the cross section area; $l_{i-1,i}$ is the length of the deck with small axial stiffness.

The damping coefficient of the impact model is obtained from the formula suggested in Anagnostopoulos, 1988.

$$c_{p,i} = 2\,\xi_{p,i}\sqrt{k_{p,i}\,\frac{m_{i-1}m_i}{m_{i-1}+m_i}} \tag{7}$$

$$\xi_{p,i} = \frac{-\ln e_{p,j}}{\sqrt{(\ln e_{p,j})^2 + \pi^2}} \tag{8}$$

Where, $\xi_{p,i}$ is the damping ratio of the i$^{th}$ element, which is correlated with the coefficient of restitution $e_{p,j}$. $m_{i-1}$ and $m_i$ are the mass of the (i-1)$^{th}$ and i$^{th}$ segment of the superstructure. The values of $e_{p,j}$ vary from 0.5 to 0.75 (Anagnostopoulos, 1988). However, the pounding pattern is not significantly affected by impact element damping (Jankowski et al. 1998).

A base-isolated highway bridge is constituted by several superstructure segments. Each segment is assumed as a linear independent single-degree of freedom system with lumped mass. By considering the equilibrium of forces for each degree of freedom, the governing equations of motion for each superstructure segment can be obtained as:

$$m_1\ddot{x}_1 + c_1\dot{x}_1 + k_1x_1 + c_{p,1}(\dot{x}_1 - 0) + k_{p,1}(x_1 - 0 + d_1) + c_{p,2}(\dot{x}_1 - \dot{x}_2) + k_{p,2}(x_1 - x_2 - d_2) = m_1\ddot{u}_{g,1}(t)$$

…….

$$m_i\ddot{x}_i + c_i\dot{x}_i + k_i x_i + c_{p,i}(\dot{x}_i - \dot{x}_{i-1}) + k_{p,i}(x_i - x_{i-1} + d_i) + c_{p,i+1}(\dot{x}_i - \dot{x}_{i+1}) + k_{p,i+1}(x_i - x_{i+1} - d_{i+1}) = m_3\ddot{u}_{g,i}(t)$$

$$\cdots\cdots\cdots$$

$$m_n\ddot{x}_n + c_n\dot{x}_n + k_n x_n + c_{p,n}(\dot{x}_n - \dot{x}_{n-1}) + k_{p,n}(x_n - x_{n-1} + d_n) + c_{p,n+1}(\dot{x}_n - 0) + k_{p,n+1}(x_n - 0 - d_{n+1}) = m_n\ddot{u}_{g,n}(t) \quad (9)$$

Where, $x_i$, $\dot{x}_i$, $\ddot{x}_i$, are displacement, velocity and acceleration of the segment relative to the ground. $\ddot{x}_{g,i}(t)$ is the input ground motion acceleration.

By using the matrix-vector notation the governing equation of motion of the structure in the longitudinal direction with the pounding effects can be written as:

$$\boldsymbol{M}\ddot{\boldsymbol{X}}(t) + [\boldsymbol{C} + \boldsymbol{C}_P(t)]\dot{\boldsymbol{X}}(t) + [\boldsymbol{K} + \boldsymbol{K}_p(t)]\boldsymbol{X}(t) + \boldsymbol{E}_P(t)d_P = -\boldsymbol{M}\ddot{\boldsymbol{u}}_{\boldsymbol{g}}(t) \quad (10)$$

$\boldsymbol{M}$ is the mass matrix, $\boldsymbol{C}$ is the damping matrix, and $\boldsymbol{K}$ is the stiffness matrix of the superstructure. In this study, the damping and stiffness are from the rubber bearing used for base isolation. $\boldsymbol{C}_P(t)$ and $\boldsymbol{K}_P(t)$ are the contact damping and stiffness matrices due to pounding. $\ddot{\boldsymbol{X}}(t)$, $\dot{\boldsymbol{X}}(t)$, $\boldsymbol{X}(t)$ are the acceleration ,velocity and the displacement vectors of the segment with respect to the ground. $\boldsymbol{E}_P(t)$ is the of pounding force matrix.

Considering installation of the MR damper, the equation of the highway bridge with MR damper is shown in below:

$$\boldsymbol{M}\ddot{\boldsymbol{X}}(t) + [\boldsymbol{C} + \boldsymbol{C}_P(t)]\dot{\boldsymbol{X}}(t) + [\boldsymbol{K} + \boldsymbol{K}_p(t)]\boldsymbol{X}(t) + \boldsymbol{E}_P(t)d_P + \boldsymbol{F}_d = -\boldsymbol{M}\ddot{\boldsymbol{u}}_{\boldsymbol{g}}(t) \quad (11)$$

Where $\boldsymbol{F}_{\boldsymbol{d}}$ is the control force generated by the MR damper. It depends on the location and the type of MR dampers. In this study MR damper has been installed between each superstructure segment and the corresponding cap beam (Figure 2). The control force provided by the MR damper can act directly on the superstructure segment to reduce relative displacement and hence the pounding force.

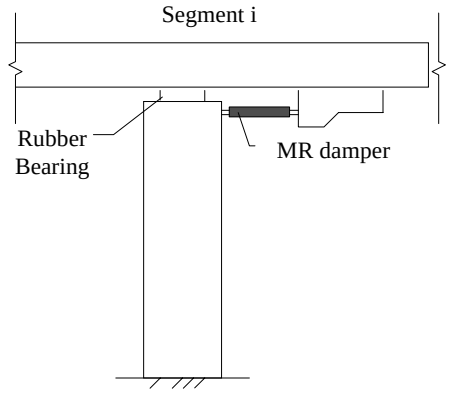


Figure 2: MR damper between superstructure segment and the cap beam

## 3. MODELLING OF MR DAMPER

### 3.1 Behaviour of MR damper

Magnetorheological (MR) dampers, consisting of a fixed orifice damper filled with a controllable MR fluid, are semiactive control devices which offer highly reliable operation. Even in the case of malfunction, they become passive dampers. Although the MR damper is

a highly non-linear device, a simple but appropriate model for the MR damper can reliably predict the behaviour of controlled structure. Spencer *et al*. (1997) proposed a phenomenological model based on a Bouc-Wen hysteresis model, which has been adopted herein, that can reliably predict the hysteretic behaviour over a wide range. In the model, steady-state yield forces due to the MR damper vary linearly with the applied voltage change and have a nonzero initial value (ie. at 0 V). The viscous damping constant also varies linearly with applied voltage.

### 3.2 Control of MR damper

To reduce the pounding between adjacent superstructures, MR dampers are assumed to be installed between the decks and the piers of each segment. Three simple control algorithms have been chosen to be tested:

Passive off: In passive off, there is no current input to the MR device and hence there is no voltage input. As no magnetic field acts, the MR fluid does not exhibit any magnetorheological properties. Effectively, MR dampers act as passive dampers.

Passive on: In this control system, the current supply and hence the voltage remains constant. In this study voltage is kept constant at 2 V.

Bang-bang control: Bang-bang control has been used for vibration control of cable bridges (Jansen and Dyke, 2000). The control algorithm switches between two states without any interval and is related to the displacement and velocity of the superstructure segments. When the displacement and velocity of the adjacent superstructure segments have the same direction, the stiffness and damping of the system increase and reach the maximum value (2 V). However, when the displacement and velocity of the system have different directions, the stiffness and damping of the system drop to the minimum value (0 V). The control algorithm can be written as:

$$V(t) = \begin{cases} V_{\max} & x_i(t)\dot{x}_i(t) > 0 \\ V_{\min} & x_i(t)\dot{x}_i(t) \le 0 \end{cases} \tag{12}$$

Where, $V(t)$ is the control signal. $V_{\max}$ and $V_{\min}$ are the maximum and minimum value of the input voltage respectively.

## 4. EFFECTIVENESS OF MR DAMPER IN REDUCING POUNDING EFFECT

### 4.1 Parameter of multi-span RC highway bridge

The bridge model adopted in this study was developed based on the model originally presented by Jankowski et al. (2000). A three-span bridge model has been developed for this study. Each segment consists of three equal spans of 40 m long and 14 m wide pre-stressed concrete deck with a mass of $2\text{x}10^4$ kg/m. The bridge substructure consists of RC piers of equal height of 11.5 m. The bridge deck is supported by two high-damping rubber bearings. The damping ratio of the bearings is 0.14. The expansion joints between segments are taken as 0.05 m. As the contribution of the bridge pier to the total stiffness is small, for the

simplicity of the analyses, the stiffness contribution by the piers is ignored. The stiffness' of end segments and mid segment are considered as 8.15 $x10^7$ and 7.19$x10^7$ N/m, respectively. Hence, the fundamental vibration periods of end segments and the mid segment are 1.078 s and 1.148 s, respectively. The contact stiffness and damping coefficients are calculated as 3.475$x10^9$ N/m and 1.808 $x10^7$ N.s/m, calculated based on the structural properties of the bridge (Equations 6-7).

## 4.2 Input Ground Motion records

The 1940 El Centro (north-south components) are used to demonstrate the effectiveness of the MR damper in reducing the pounding effect. The earthquake records have been scaled to obtain the peak ground acceleration of 800 gal to represent the ground motion of a strong earthquake.

## 4.3 Response of the bridge without control

The base isolated three-segment RC bridge model without the inclusion of the pounding effect (without the inclusion of contact element) is first analysed to evaluate the response of the uncontrolled model in the event of an earthquake ground motion. Figure 3 shows the time histories of the structural responses of the bridge (segment 2) under scaled El Centro earthquake ground motion when pounding has not been considered in the analysis. It can be seen that the maximum displacement and acceleration response of the segment are 0.143 m and 9.60 m/sec$^2$. The relative displacement between adjacent segments is well above the spacing between them.

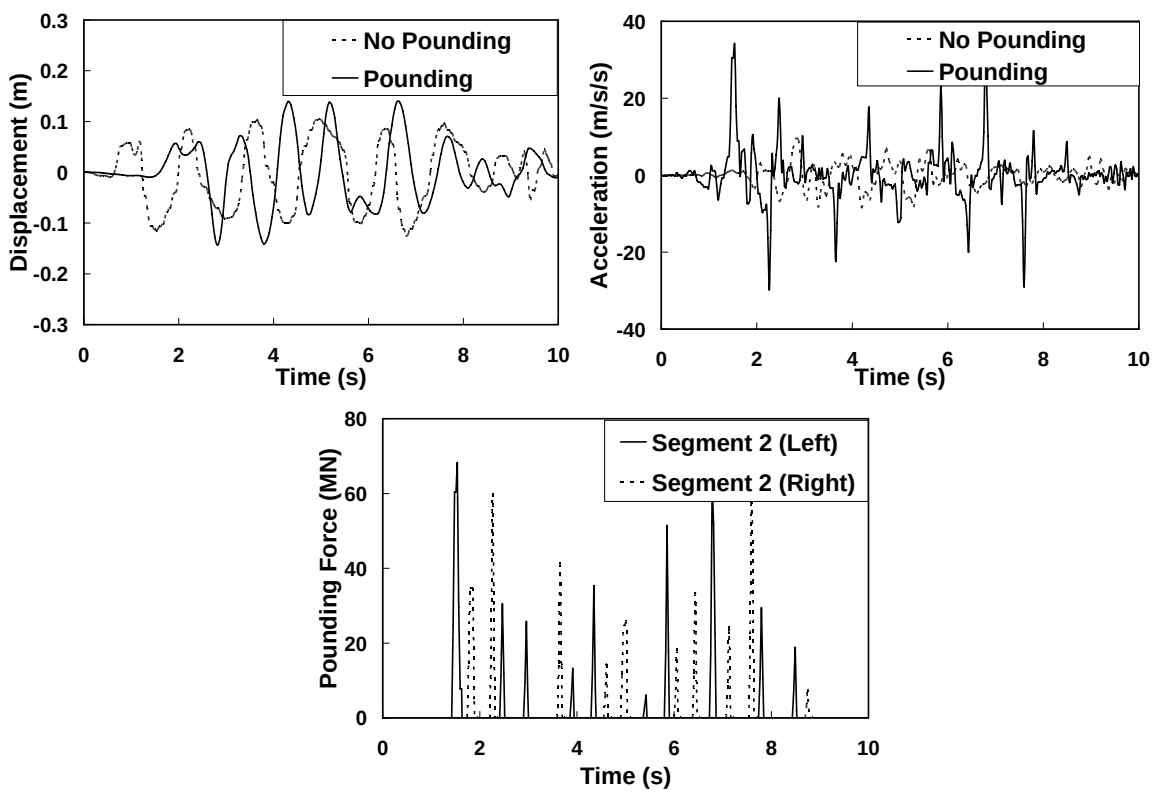


Figure 3: Structural response of segment 2 under El Centro earthquake ground motion

The dynamic responses of the uncontrolled bridge model with pounding effects by applying the contact point under El Centro earthquake are also shown in Figure 3. It can be observed that several sharp peaks appear in the time history responses due to pounding with the application of contact point. The segment has been subjected to several collisions on the left- and right side of the segment, as evident in Figure 3. The peak displacement of the response has been reduced from 0.143 m to 0.126 m. However, maximum acceleration of the segment has been increased nearly four times from 8.56 m/s$^2$ to 33.87 m/s$^2$. The maximum pounding forces on the left and right side of the segment have been observed to be 68.29 and 65.59 MN. Such pounding forces are capable of causing significant damage to the bridge model considered herein.

### 4.4 Response of the bridge with control by MR damper

The advantages of the application of MR dampers in reducing the pounding effect have been investigated. The bridge has been analysed for three control strategies: passive off, passive on, and bang-bang control. As mentioned in Section 3.2, the current is held at the constant values of 0 and 2 V for passive off and passive on MR dampers, respectively.

Figures 4-6 represent the time histories of the structural responses of the bridge under scaled El Centro earthquake ground motion for the three control strategies adopted herein. The dynamic responses of the bridge in the form of peak values have been reported in Table 1.

It can be observed from Figure 4 that peak displacement of the bride segment has been reduced from 0.126 m to 0.101 m, providing a 20% reduction with the installation of passive off MR damper when compared with uncontrolled response of the bridge segment. Similarly peak acceleration of the bridge segment has been reduced from 33.87 m/s$^2$ to 27.87 m/s$^2$. The reduction is about 18% (Table 1). Left side pounding and right side pounding forces of the segment have been reduced from 68.29 MN to 53.01 MN and 65.59 MN to 50.22 MN. The achieved reductions are well above 20%.

Figure 5 reveals that structural response of the bridge segment can be significantly suppressed by the installation of passive on MR dampers. The peak displacement and acceleration of the bridge segment have been reduced from 0.126 m to 0.077 m and 33.87 m/s$^2$ to 18.25 m/se2, providing reductions of 39% and 46% respectively (Table 1). Also, left side and right side pounding forces have been reduced from 68.29 MN to 42.66 MN and 65.59 MN to 52.23 MN. The reductions are 38% and 20%, respectively.

Figure 6 represents the structural response of the bridge with the installation of MR damper acting on a simple control strategy termed as bang-bang control. It is important to note that the maximum input current has been considered as 2 V, similar to passive on MR damper. Slightly improved performance in the reduction of the pounding force has been observed with the adopted simple control strategy. The peak displacement and acceleration of the bridge segment have been reduced from 0.126 m to 0.077 m and 33.87 m/s$^2$ to 20.25 m/s$^2$, providing reductions of 39% and 40% respectively (Table 1). Left side and right side

pounding forces have been reduced from 68.29 MN to 37.01 MN and 65.59 MN to 44.05 MN. The reductions are 46% and 33%, respectively.

It can be observed from the analysis (Figures 4-6 and Table 1) that peak displacement, acceleration, and pounding forces can be significantly reduced by the installation of MR dampers, although pounding forces have not been mitigated fully. It is important to note that the scaled El Centro ground motion is representative of very strong earthquake ground motion. The pounding effect could be completely mitigated if the analysis were conducted for moderate earthquake ground shaking levels. All three control strategies have been found to be effective in reducing pounding forces generated due to collision between adjacent segments as a result of velocity exchange. Pounding of the bridge model has been observed to be reduced to some extent with the installation of passive off MR dampers, which mainly provides additional damping to the model. However, due to low energy dissipation ability, considerable pounding forces have been observed for the analysed bridge. Passive on MR dampers have been observed to be effective in reducing peak displacement and acceleration response of the bridge. Also, significant reduction of pounding forces has been achieved with the installation of passive on MR damper. Improved performance has been observed with the installation of MR dampers adopting the bang-bang control strategy. It is recommended to extend the study to investigate other control strategies which might be able to reduce or mitigate the pounding force more efficiently.

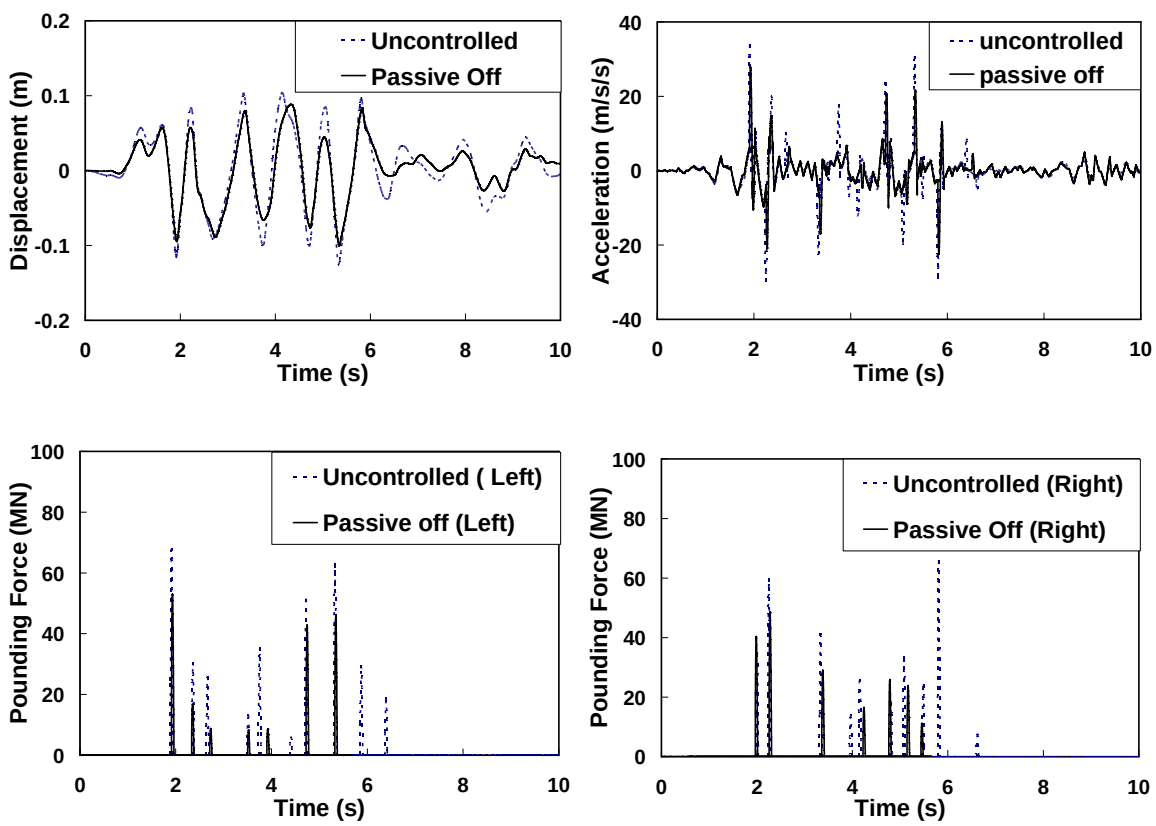


Figure 4: Structural response of bridge (segment 2) with MR damper (passive off) under El Centro earthquake ground motion

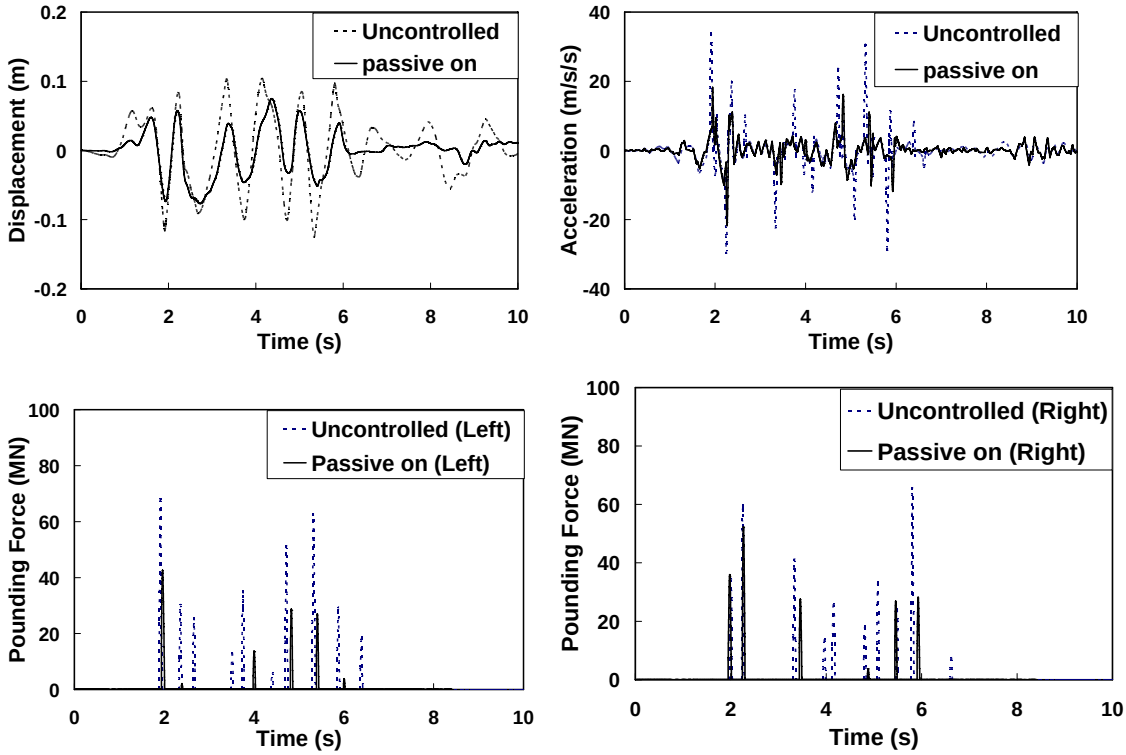


Figure 5: Structural response of bridge (segment 2) with MR damper (passive on) under El Centro earthquake ground motion

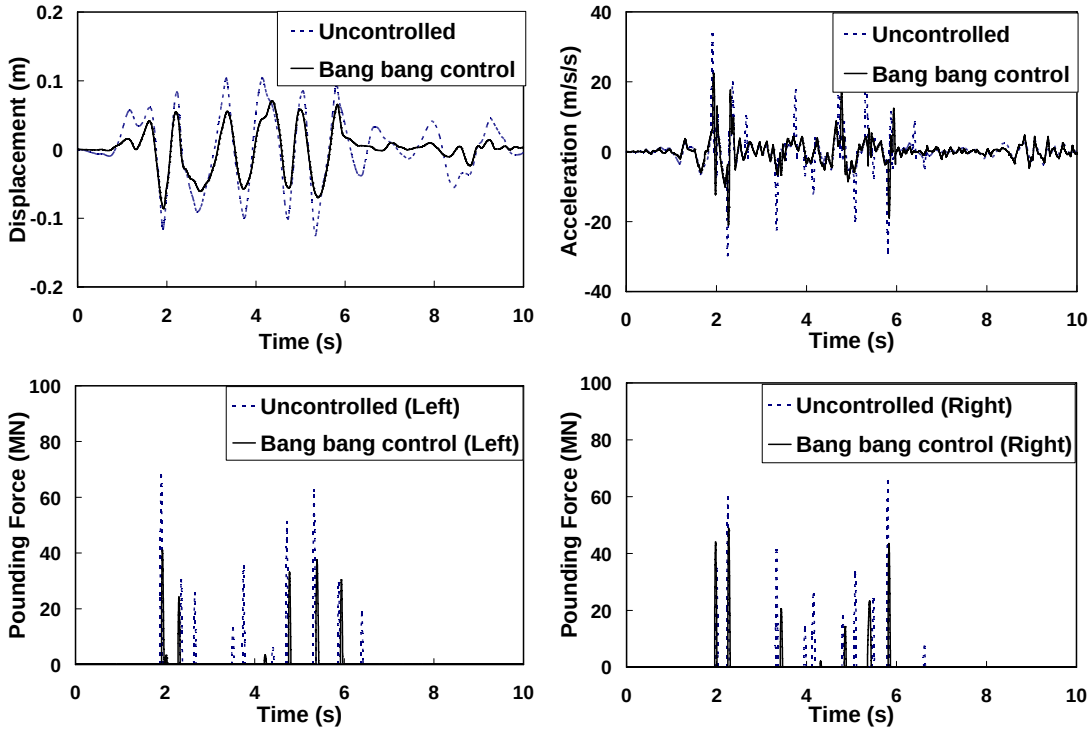


Figure 6: Structural response of bridge (segment 2) with MR damper (bang bang control) under El Centro earthquake ground motion

Table 1 Response of the bridge (segment 2) with MR damper under El Centro earthquake ground motion

| Earthquake Record | Response Quantity | Control of MR damper | | | |
|---|---|---|---|---|---|
| | | Without control | Passive off | Passive on | Bang-bang control |
| The El Centro Earthquake | Displacement (m) | 0.105 | 0.088 ( 17%) | 0.075 (29%) | 0.064 (39%) |
| | | **-0.126** | **-0.101**(20%) | **-0.077** (39%) | **-0.077** (39%) |
| | Acceleration ($m/s^2$ ) | **33.87** | **27.87** (18%) | 18.25 (46%) | **20.25** (40%) |
| | | -29.78 | -22.37 (25%) | **-21.76** (27%) | -18.83 (37%) |
| | Left side of pounding force(MN) | **68.29** | **53.01** (22%) | **42.66** (38%) | **37.01** (46%) |
| | | -14.9 | -10.85 (27%) | -5.57 (63%) | -6.28 (58%) |
| | Right side of pounding force(MN) | **65.59** | **50.22** (23%) | **52.32** (20%) | **44.05** (33%) |
| | | -14.03 | -10.6 (24%) | -10.74 (23%) | -8.79 (37%) |

N.B. Bold fonts represent absolute maximum response quantities. Values within bracket represent percentage of reductions. Positive values indicate response in the direction of ground motion and negative values represent response opposite to the direction of ground motion.

## 5. CONCLUSIONS

Bridges are considered critical components of highway transportation systems; however, recent earthquakes have demonstrated their vulnerability even in the event of moderate levels of earthquake ground motions. Pounding between superstructure segments is considered one of the main reasons for damage and collapse of base-isolated multi-span RC highway bridges.

A simplified analytical model in conjunction with MR dampers for pounding between adjacent superstructure segments has been developed. Linear visco-elastic contact element approach has been chosen to model the seismic pounding effect, as the parameter selection and numerical solution is easier and transparent in such approach.

Analysis of a three-segment bridge shows that pounding can generate significant force which may cause damage at the point of collision. Acceleration of superstructure segment due to pounding has been observed to be amplified by several times.

It has been observed that the seismic pounding effect can be effectively reduced by MR dampers. Three control strategies namely, passive off, passive on, and bang-bang control have been investigated. The pounding of the superstructure segments can be reduced by passive-off control strategy to some extent due to their low energy dissipation ability. In the case of passive on control strategy, the pounding between adjacent superstructure segments has been reduced effectively. However, with its simple control algorithm, the bang bang control has been found to be the most effective.

## 6. REFERENCES


Anagnostopoulos, S.A. (1988). Pounding of building in series during earthquake, Earthquake Engineering and Structural Dynamics. 16(3): 443–456.

Guo, A.X. and Li, H. (2008). Pounding reduction of highway bridges with pounding effect by using Magnetorheological dampers under earthquake excitation. Advances in Structural Engineering. 11(3): 317-334.

Guo, A.X., Li, Z., Li, H., and Ou, J. (2009). Experimental and analytical study on pounding reduction of base-isolated highway bridges using MR dampers. Earthquake Engineering and Structural Dynamics. 38(11): 1307-1333.

Jankowski R, Wilde K, Fujino Y. 1998. Pounding of superstructure segments in isolated elevated bridge during earthquakes. Earthquake Engineering and Structural Dynamics 27: 487–502.

Jankowski, R., Wilde, K. and Fujino, Y. (2000). Reduction of pounding effects in elevated bridges during earthquake. Earthquake Engineering and Structural Dynamics. 29(2):195–212.

Jansen, L.M. and Dyke, S.J. (2000). Semiactive control strategies for MR dampers: comparative study. Journal of Engineering Mechanics. 126(8): 795-803.

Maison B.F. and Kasai, K. (1990). Analysis for type of structural pounding. Journal of Structural Engineering. 116: 957-977.

Sireteanu, T. and Stammers, C.W. (2000).Control of building seismic response by means of three semi-active friction dampers. Journal of Sound and Vibration. 237(5): 745-759.

Spencer B.F., Dyke, S.J., Sain, M.K., and Carlson, J.D. (1997). Phenomenological model of a magnetorheological damper. Journal of Engineering Mechanics. 123(3):230–238.

Vega, J., Rey, I.D. and Alarcon, E. (2009). Pounding force assessment in performance-based design of bridges. Earthquake Engineering and Structural Dynamics. 38: 1525-1544.

Zhu, P., Abe, M. and Fujino, Y. (2004). Evaluation of pounding countermeasures and serviceability of elevated bridges during seismic excitation using 3D modeling. Earthquake Engineering and Structural Dynamics. 33(5):591–609.