University of Wollongong
Research Online

Faculty of Education - Papers (Archive)

Faculty of Social Sciences

2009

Vygotsky and linguistic relativity: the case of Chinese and English reading

John F. Ehrich
University of Wollongong, jehrich@uow.edu.au

Publication Details
Ehrich, J. F. (2009). Vygotsky and linguistic relativity: the case of Chinese and English reading. The Linguistics Journal, 4 (1), 91-111.

Research Online is the open access institutional repository for the University of Wollongong. For further information contact the UOW Library: research-pubs@uow.edu.au

The Linguistics Journal

May 2009
Volume 4 Issue 1

Editors: Paul Robertson and John Adamson

The Linguistics Journal
May 2009
Volume 4, Number 1

Editors: Paul Robertson and Joseph Jung

The Linguistics Journal: Volume 4, Number 1

Published by the Linguistics Journal Press

Linguistics Journal Press
A Division of Time Taylor International Ltd
Trustnet Chambers
P.O. Box 3444
Road Town, Tortola
British Virgin Islands

http://www.linguistics -journal.com
© Linguistics Journal Press 2009

This E-book is in copyright. Subject to statutory exception
no reproduction of any part may take place without
the written permission of the Linguistics Journal Press.

No unauthorized photocopying

All rights reserved. No part of this book may be reproduced, stored
in a retrieval system or transmitted in any form or by any means,
electronic, mechanical, photocopying or otherwise, without the prior
written permission of The Linguistics Journal.
linguisticsj@yahoo.com

Editors: Dr. Paul Robertson and Dr. Joseph Jung
Senior Associate Editor: Dr. John Adamson
Journal Production Editor: Dr. Benjamin Schmeiser

ISSN 1738-1460

The Linguistics Journal

Table of Contents:

Foreword by John Adamson……..…….....5

1. **Mandeep Singh Gill, Gurpreet Singh Lehal, & Shiv Sharma Joshi……...……6 - 22**
   - *Part-of-Speech Tagging for Grammar Checking of Punjabi*

2. **Ping Huang…….23 - 45**
   - *A Comparison of International and Chinese Journal Article Abstracts: From Move Structure to Transitivity analysis*

3. **Victor Ho……..46 - 66**
   - *The Generic Structure and Discourse Strategies Employed in Downward Request E-mails*

4. **M.T. Lamidi……67 - 90**
   - *Parametric Variation of the 3rd Person Singular in English and Some Nigerian Languages*

5. **John F. Ehrich ……91 - 111**
   - *Vygotsky and Linguistic Relativity: The Case of Chinese and English Reading*

The Linguistics Journal

Welcome to the Spring 2009 edition of *The Linguistics Journal* in which we are pleased to present five articles from diverse linguistic contexts. Due to increased interest in the journal in the last year, a warm welcome is extended to new editors appointed to the review team and especially to Benjamin Schmeiser who has taken over production duties from Marcus Otlowski. I would like to take this opportunity to thank Marcus for his tireless efforts in preparing many papers for past editions. Thanks, as always, is extended to those who have supervised, reviewed and prepared the papers in this edition.

The first paper on "Part-of-Speech Tagging for Grammar Checking of Punjabi" by Mandeep Singh Gill, Gurpreet Singh Lehal, and Shiv Sharma Joshi investigates the use of a new tagset device for the Punjabi language and presents ground-breaking innovations in parts-of-speech tagging. The authors recommend this for grammar checking of not only Punjabi but also other languages of the Modern Indo-Aryan family.

In Ping Huang's comparison of international and Chinese journal article abstracts, Swales' (1981, 1990) move structure model and Halliday's (1994) description of Transitivity Processes and lexis are employed to analyze a small corpus. Findings reveal important messages for writers preparing abstracts for academic journal submission in terms of structural moves and their distribution, the distribution of Transitivity Processes related to the move structure, and lexical analysis of Swales' move structure.

In Victor Ho's paper the use of downward requests in emails by a multi-cultural group of teachers is investigated using Bhatia's (2004) model of genre analysis. Three features of generic structures, intertextuality, and lexico-grammar are revealed in the messages and explained in terms of the cultural background of both the senders and recipients. Insights are also gained as to the rank of imposition of the requested acts.

The next article by M. T. Lamidi investigates the parametric variation of the 3rd person singular in English and Nigerian languages. This study explores the third person singular effect on subject, object and possessive pronouns in English, Yorùbá, Igbo and Hausa languages and concludes that its uniqueness is possibly similar across the languages.

The final paper by John F. Ehrich considers Chinese and English reading from the perspective of studies in Vygotskyan socio-cultural theory and linguistic relativity. Ehrich puts forward the case that according to socio-cultural theory, the internalization of Chinese logographic characters or English alphabetic script leads to distinct inner processing, i.e. that language itself influences cognitive processing, an argument which is seen in behavioural and neuroanatomical studies.

I hope you enjoy reading this selection of papers and look forward to your own submissions.

John Adamson
Senior Associate Editor
The Linguistics Journal

The Linguistics Journal

Part-of-Speech Tagging for Grammar Checking of Punjabi

Mandeep Singh Gill & Gurpreet Singh Lehal

Punjabi University, Patiala, India

Shiv Sharma Joshi

Punjabi University, Patiala, India

Biodata

Mandeep Singh Gill received his master's in software engineering from Thapar University, Patiala, India in 2003. His research interests include natural language processing and software testing. He is currently working on developing software for grammar checking of Punjabi, for his Ph.D.

Gurpreet Singh Lehal is currently head of Computer Science Department, Punjabi University Patiala and Director of Advanced Centre for Technical Development of Punjabi Language, Literature and Culture. Dr. Lehal has published more than 30 papers in national/international journals and proceedings of leading conferences. His main areas of interest are optical character recognition and natural language processing.

Shiv Sharma Joshi received his master's and Ph.D. in Linguistics from University of London, London. Dr. Joshi, a renowned linguistic, is member of various professional bodies, and has authored three books, four dictionaries, and approximately one hundred research papers. His specializations include Punjabi phonology and instrumental (acoustic) phonetics. Lexicography, computational linguistics, and teaching of Punjabi as a foreign language form his current research interests.

Abstract

Part-of-speech (POS) tagging is one of the major activities performed in a typical natural language processing application. This paper explores part-of-speech tagging for the Punjabi language, a member of the Modern Indo-Aryan family of languages. A tagset for use in grammar checking and other similar applications is proposed. This fine-grained tagset is based entirely on the grammatical categories involved in various types of concord in typical Punjabi sentences. The morpho-syntactic features taken in this tagset are largely based on the inflectional morphology of Punjabi words. The motivation behind devising this tagset, with focus on agreement features of these languages, is that

there is no tagset available for Punjabi or other Indian languages. The tagsets for other languages do not cover all the grammatical features, which are required for agreement checking in Punjabi texts. A rule-based tagger derived from this tagset is also described. This will be the first published POS tagger for Punjabi. The tagset described in this paper is recommended for grammar checking and other similar applications for the languages sharing grammatical features with Punjabi, more specifically the languages of the Modern Indo-Aryan family.

Key Words: morphology, part-of-speech tagging, tagset, grammar checking, computational linguistics, Punjabi

Introduction

In this paper, we discuss the issues concerning development of a POS tagset and a POS tagger for use as a part of the project on developing an automated grammar checking system for the Punjabi language. Punjabi is a member of the Modern Indo-Aryan family of languages and has a rich system of inflectional morphology. To work on grammar checking, there is a need to understand the grammatical categories involving various word classes. In a typical natural language processing (NLP) application, a morphological analyzer normally precedes the POS tagger. The output of the morphological analysis is usually ambiguous as it may return more than one POS (Part-of-speech) tag for a single word because the same word can be used as a noun or a verb, for example. Therefore, the job of a POS tagger is to assign only one POS tag to a word based on the context in which it is used. A POS tagger is also known as a morphological disambiguator or simply as a tagger. There are various POS tags in Punjabi like noun, pronoun, verb, adjective, and so forth. Nouns can be further divided into singular and plural nouns, feminine and masculine nouns, etc. Verbs can be present tense verbs or past tense verbs. Our part-of-speech (POS) tagger builds on a full form lexicon-based morphological analyzer, and we are following a rule-based approach for tag disambiguation.

The next section provides the work on existing part-of-speech taggers and tagsets. After that, the word classes in Punjabi along with their grammatical categories are discussed. This discussion forms a basis for the design of the POS tagset for Punjabi, provided in the following section. Afterwards, an overview of the grammatical categories involved in various types of concord in a Punjabi sentence is provided. Later on, design and implementation details of a rule-based tagger based on this tagset is discussed, along with the application of this POS tagset for grammar checking of Punjabi. The paper concludes by providing a summary of contributions.

Literature Review

The main aim of a POS tagger is to disambiguate a word based on the context in which it is being used. The approaches used for developing POS taggers i.e. resolving ambiguity, can be broadly categorized into rule-based, statistical, and transformation-based approaches.

Rule-based approaches are primarily based on the handwritten linguistic rules. Handwritten rule-based approaches have been applied to develop tagging systems for various languages like Turkish (Oflazer & Kuruöz, 1994) and French (Chanod & Tapanainen, 1995). These approaches are not focused on language learning, and all the rules are manually devised using the linguistic information about the language under consideration.

Statistical approaches work on large tagged corpora to reveal grammar in the form of probabilities. Various machine learning approaches used for supervised or unsupervised learning of POS tags include neural networks for English (Schmid, 1994) and Portuguese (Marques & Lopes, 1996), memory-based learning for English (Daelemans et al., 1996), support vector machines for Arabic (Diab et al., 2004), and the fully Bayesian approach for English (Goldwater & Griffiths, 2007).

In transformation-based approaches, the system is designed in such a way that it learns rules from the tagged corpus in the form of transformations. It devises the transformations based on accuracy level that it reaches by following those transformations and thus ranks them accordingly for future use. Brill (1992) introduced this system. It performs comparable to taggers based on probabilistic models. It automatically acquires the rules, so there is no need to develop the rules manually.

Khoja (2001) discussed APT, a POS tagger for Arabic language. It has 131 tags in its tagset. It uses a hybrid approach: a combination of both the rule-based and statistical approaches. A statistical POS tagger based on Hidden Markov Models (HMM) was provided by Cutting et al. (1992). The authors claim its accuracy to be around 96%. A POS tagger for Swedish was discussed by Carlberger and Kann (1999). This is a stochastic tagger using HMM. Its accuracy is around 97%. Some of the applications of this tagger like grammar checking, word prediction, and keyword extraction, were presented by Carlberger and Kann (2000).

Various statistical approaches were applied for POS tagging and chunking of three Indian languages: Hindi, Telugu, and Bengali. Tagging accuracy attained was in the range of 67-85%, using different statistical approaches as described by Bharati and Mannem (2007). The POS tagset used for tagging in these approaches has around 26 tags (Bharati, 2007). There are various other POS taggers developed so far which use either a rule-based approach or a statistical approach, or a hybrid of both. Statistical taggers are reported to achieve more accuracy than the rule-based taggers. A combination of these two can be used to achieve accuracy above 98%.

The accuracy of a POS tagger depends on various factors. One of the factors affecting accuracy is the size of the POS tagset. We can achieve maximum accuracy choosing a very small tagset. However, in that case, the output of the POS tagger may not be of much use. Size of tagset in turn depends on the application for which the output of POS tagger will be used. We have to strike a balance between the desired accuracy and the level of grammatical categories that we want to cover with the tagset. The other factor affecting the accuracy is the size of the training corpus. The reason behind the lower accuracy levels of the taggers, discussed by Bharati and Mannem (2007), is that the tagged training corpus that they worked on was very small. The size of tagged corpus, which is required for training of any statistical tagger, in turn depends upon the size of the selected tagset. Some popular tagsets developed for English including the Penn Treebank tagset, UPenn (Marcus et al., 1993), were compared by Atwell et al. (2000).

The main reason behind our devising a new tagset is that the existing tagsets do not focus much on the grammatical categories that are required to work on agreement checking. We would like to clarify here that to the best of our knowledge there is no POS tagset designed for the Punjabi language (and for other similar Indian languages, as well), with the focus on its grammatical features. As agreement is the main requirement of grammar checking, we need a tagset that covers almost all the grammatical categories that function in various types of agreements in a sentence. Due to these reasons, in section 5, we discuss a tagset that we have devised for use in grammar checking of Punjabi. However, it can equally be applied to similar applications for other languages, more specifically the languages belonging to the Indo-Aryan family like Hindi, Bengali etc. i.e., those that share grammatical features with Punjabi, for sentence or phrase concordance.

Methodology

Punjabi Word Classes

The first step in devising the POS tagset is to understand the word classes and the grammatical information (or features) that will be required for the words of these word classes. The choice of features that are required for various words depends directly on the NLP application in which one has to use the tagset. In grammar checking, or any other similar natural language processing application, these features will be the formal grammatical categories for which the words show inflection and mark various grammatical relations in a typical sentence. However, some other application in which one's purpose may be just to know the word class of a word will not require these features. As stated earlier, our aim is to use this tagset in grammar checking application. Therefore, we will highlight only those features that can be helpful in checking the grammaticality of Punjabi sentences, thus ignoring any semantic features. When considering grammatical features our

focus, only on the features resulting from inflectional morphology and not derivational morphology will be studied.

Following is a list of word classes along with their grammatical information that will form the basis of the POS tagset provided in next section, based on the analysis of Punjabi grammar- related works carried out by Chandar (1964), Gill & Gleason (1986), Singh (1988), Puar (1990), Joshi et al. (1998), Joshi (2000), and Singh (2002):

- **Noun:** Grammatical information required for Punjabi nouns is gender, number, and case. Gender can be masculine, feminine, or both (as some nouns can be used both as masculine and as feminine). Number can be singular or plural. Case can be any of six types: direct, oblique, instrumental, ablative, locative, and vocative. Out of these six cases, instrumental case is seen only in plural form of some nouns; ablative case is seen only in singular form of some nouns.
- **Pronoun:** Pronouns belong to the closed category of word classes. For the present work, pronouns have been classified according to their commonly-used types: personal, reflexive, demonstrative, indefinite, and interrogative. Here, grammatical information required is number, case, person, and gender. Except for first and second person personal pronouns, pronouns are in third person. Gender information is required only for genitive case forms of pronouns; other forms can be used equally for both genders.
- **Adjective:** There are two categories of adjectives, inflected and uninfected. The inflected adjectives show inflection like nouns. Therefore, grammatical information required for adjectives is gender, number, and case for inflected adjectives, cardinals, and ordinals. For uninflected adjectives, virtually no grammatical information is required. In a Punjabi sentence, the adjective must agree with its noun in gender, number, and case, in what is known as modifier and noun agreement.
- **Verb:** The verbs can be further classified into main verb, operator (primary, progressive, passive, and modal), and auxiliary verbs. Here, grammatical information required is gender, number, person, phase, transitivity, causality, and tense. Phase can be perfect or non-perfect. Tense can be past, present, or future. A verb can be transitive or intransitive or both. Causality can have values like simple causal or double causal or none. Verbs do not inflect for aspect (progressive/non-progressive). It is shown by the presence or absence of progressive operator in the verb phrase in a sentence. Auxiliary verbs have been treated separately as they follow different inflectional patterns. For auxiliary verbs, the grammatical information required is gender, number, person, and tense. These also belong to closed category of word classes, so the words belonging to this word class are very limited in number. The operator verb is used

for some main verb forms that follow other main verbs to form verb phrases in sentences and thus mark aspect, tense, and active/passive information, and so forth.

- **Adverb:** There are two classes of adverbs, inflected and uninflected. Inflected adverbs may behave like nouns. Grammatical information required for inflected adverbs in such cases will be the same as required for nouns. For uninflected adverbs, no grammatical information is required.
- **Postposition:** The words of this class are of two types, inflected and uninflected. for example, ਦਾ *da* postposition shows inflection for gender, number, and case. Others are uninflected, and thus no extra information is required.
- **Conjunction:** The words of this class are uninflected. For the present work, these have been classified into two sets, coordinate conjunction (joins two independent clauses in a compound sentence) and subordinate conjunction (joins an independent and a dependent clause in a complex sentence). Therefore, only type (coordinate or subordinate or both) is required for the words of this class.
- **Interjection:** The words of this class are also uninflected. These can be classified according to their type: exclamation, sorrow, etc. As type is semantic based and is not significant for grammar checking, it will not be considered in the present POS tagset.
- **Particles:** The words of this class are classified into categories of emphatic, negative, and honorific and so forth. These are also uninflected. Vocative particles are inflected for gender and number. Therefore, these have been treated separately.
- **Verb-part:** The words of this word class are uninflected. It differs from other similar word classes in the sense that the words of this word class can only be used as part of a verb phrase in a sentence. No separate grammatical information is required for this word class.

Agreement in Punjabi Sentences

Before going into details of POS tagging, we would like to provide an overview of the grammatical categories that function in various types of agreements in a typical Punjabi sentence. This will serve as a guide for the next sections to follow. For the purpose of this paper, the grammatical categories that we take are purely formal, and none of them is based on semantics. In this section, two types of agreement, involving nouns and their modifiers in a typical noun phrase, and involving subject and verb in a sentence, will be taken into consideration. Other types of agreement involve similar or fewer grammatical categories.

Noun and Modifier Agreement

Modifier is a word that gives a specific meaning to a particular word. In the phrase – **green** car, the word "green" is acting as a modifier (to modify or highlight some properties) of the word "car". In Punjabi language, adjectives, cardinals, ordinals, some forms of main verb, and some pronouns can act as modifiers for nouns in noun phrases. The highlighted words/phrases in the following phrases function as modifiers. The phrases are provided in Punjabi in Gurmukhi script (the script used to write Punjabi) along with their transliteration and English gloss in Roman script. With the transliteration of the words taking part in this agreement, gender (M-Masculine, F-Feminine, and B-Both), number (S-Singular, P-Plural, and B-Both), and case (D-Direct and O-Oblique) information is provided for better understanding.

1.	**ਇੱਕ**	**ਛੋਟਾ**	ਬੱਚਾ		
	ikk_BSD	**chōṭā_MSD**	baccā_MSD		
	One	**small**	kid		
2.	**ਇਹ**	ਮੁੰਡੇ			
	ih_BBD	muṇḍē_MPD			
	These	boys			
3.	**ਇਹਨਾਂ**	ਮੁੰਡਿਆਂ	ਨੇ ਜਾਣਾ ਹੈ		
	ihnāṃ_BBO	muṇḍiāṃ_MPO	nē jāṇā hai		
	These	boys	have to go		
4.	**ਪੰਜ**	ਬਿੱਲੀਆਂ			
	pañj_BPD	billīāṃ_FPD			
	Five	cats			
5.	**ਪੰਜ**	ਕੁੱਤੇ			
	pañj_BPD	kuttē_MPD			
	Five	dogs			
6.	ਮੁੰਡਾ,	**ਜਿਹੜਾ**	**ਹੱਸ**	**ਰਿਹਾ**	**ਸੀ**
	muṇḍā_MSD,	**jihḍaā_MSD**	**hass_BB**	**rihā_MS**	**sī_BB**
	The boy,	**which**	**was laughing**		

The modifier of a noun can be a single word, more than one word, or even a lengthy phrase. As is evident from the above examples, the agreement between noun and its modifiers is in terms of number only in case of English language. However, when it comes to Punjabi language, then this agreement is in terms of gender, number, and case. Therefore, these two additional grammatical

categories need to be taken into account to check the agreement. In turn, this requires proper attention in the tagset of the POS tagger designed for Punjabi.

Subject and Verb Agreement

In a sentence, the subject is responsible for any action, and the verb is the unit which is describing the action. In the following sentences, the subject is highlighted and the rest is the verb phrase. With the transliteration of words taking part in this agreement, gender (M-Masculine, F-Feminine, and B-Both), number (S-Singular, P-Plural, and B-Both), and person (F-First, S-Second, T-Third, and X-No inflection) information is provided.

1. **ਅਸੀਂ** ਜਾ ਰਹੇ ਹਾਂ ।

   asīṃ_BPF jā rahē_MPX hāṃ_BBF.

   We are going.

2. **ਮੁੰਡੇ** ਜਾ ਰਹੇ ਹਨ ।

   muṇḍē_MPD jā rahē_MPX han_BPT.

   The boys are going.

3. **ਕੁੜੀਆਂ** ਜਾ ਰਹੀਆਂ ਹਨ ।

   kuḍaīāṃ_FPD jā rahīāṃ_FPX han_BPT.

   The girls are going.

The agreement for subject and verb is in terms of number and person for English, and in terms of gender, number, and person for Punjabi. Therefore, this additional category of gender needs to be accounted for in the POS tags of noun and verb word classes of Punjabi.

Punjabi POS Tagset

We have devised a tagset taking into account all the grammatical categories that can be helpful in later stages of grammar checking of Punjabi text, based on the work in previous section. The tagset that we have devised is provided below, for all the word classes in Punjabi. This tagset is somewhat similar to the one discussed by Hardie (2004), but with some key differences. This tagset is based purely on the grammatical categories (ignoring any semantic information) and on only those grammatical categories that function in any type of agreement in a sentence, in the context of the Punjabi language.

- **Noun**
  - NN<a><b><c> - Noun<a><b><c>
    - <a> can be M (Masculine), F (Feminine), or B (Both)
    - <b> can be S (Singular) or P (Plural)
    - <c> can be D (Direct), O (Oblique), V (Vocative), A (Ablative), L (Locative), or I (Instrumental): e.g. NNMSD, NNFPI, NNBSL.
- **Personal Pronoun**
  - PNP<a><b><c><d> - Pronoun Personal<a><b><c><d>
    - <a> can be M (Masculine), F (Feminine), or B (Both)
    - <b> can be S (Singular) or P (Plural)
    - <c> can be F (First), S (Second), or T (third)
    - <d> can be D (Direct), O (Oblique), A (Ablative), T (Dative) or V (Vocative): e.g. PNPMSFD, PNPFPTO, PNPBSFT
- **Reflexive Pronoun**
  - PNR<a><b><c> - Pronoun Reflexive<a><b><c>
    - <a> can be M (Masculine), F (Feminine), or B (Both)
    - <b> can be S (Singular) or P (Plural)
    - <c> can be D (direct), O (Oblique), or V (Vocative): e.g. PNRMSD, PNRFPV, PNRBPO
- **Demonstrative Pronoun**
  - PND<a><b><c> - Pronoun Demonstrative<a><b><c>
    - <a> can be M (Masculine), F (Feminine), or B (Both)
    - <b> can be S (Singular) or P (Plural)
    - <c> can be D (Direct), O (Oblique), L (Locative), A (Ablative), T (Dative), or I (Instrumental): e.g. PNDMSD, PNDFPO, PNDBPI
- **Indefinite Pronoun**
  - PNIBSD – Pronoun Indefinite Both Singular Direct
  - PNIBSO – Pronoun Indefinite Both Singular Oblique
  - PNIBPD – Pronoun Indefinite Both Plural Direct
  - PNIBPO – Pronoun Indefinite Both Plural Oblique
  - PNIBPL – Pronoun Indefinite Both Plural Locative
  - PNIBPI – Pronoun Indefinite Both Plural Instrumental

- **Relative Pronoun**
  - PNE<a><b><c> - Pronoun Relative<a><b><c>
    - <a> can be M (Masculine), F (Feminine), or B (Both)
    - <b> can be S (Singular) or P (Plural)
    - <c> can be D (Direct), O (Oblique), or I (Instrumental) : e.g. PNEMSD, PNEFPO, PNEBPI
- **Interrogative Pronoun**
  - PNN<a><b><c> - Pronoun Interrogative<a><b><c>
    - <a> can be M (Masculine), F (Feminine), or B (Both)
    - <b> can be S (Singular) or P (Plural)
    - <c> can be D (Direct), O (Oblique), A (Ablative), or I (Instrumental) : e.g. PNNMSD, PNNFPO, PNNBSA
- **Inflected Adjective**
  - AJI<a><b><c> - Adjective Inflected<a><b><c>

    <a>, <b>, and <c> will have values same as the noun word class.
- **Uninflected Adjective**
  - AJU – Adjective Uninflected
- **Cardinal**
  - CDPD – Cardinal Plural Direct
  - CDPO – Cardinal Plural Oblique
  - CDPL – Cardinal Plural Locative
- **Ordinal**
  - ODMSD – Ordinal Masculine Singular Direct
  - ODMSO – Ordinal Masculine Singular Oblique
  - ODFSD – Ordinal Feminine Singular Direct
  - ODFSO – Ordinal Feminine Singular Direct
- **Main Verb**
  - VBM<a><b><c><d><e><f><g><h> - Verb Main<a><b><c><d><e><f><g><h>
    - <a> can be M (Masculine), F (Feminine), or X (No Inflection)
    - <b> can be S (Singular), P (Plural), or X (No Inflection)
    - <c> can be F (First), S (Second), T (Third), or X (No Inflection)
    - <d> can be 1 (Present), 2 (Past), 3 (Future), or X (No Inflection)
    - <e> can be P (Perfect) or X (No Inflection)
    - <f> can be T (Transitive), I (intransitive), or B (Both)

        - <g> can be N (None), S (Single Causal), or D (Double Causal)
        - <h> will be inflectional class value e.g. EGA, IA, DA etc. This serves the purpose of 'mood' and helps in phrase chunking and checking phrase concordance, in later stages of grammar checking: e.g. VBMMSF3XTNEGA, VBMMSXXPTNIA, VBMMPS3XTNEGA.

- **Auxiliary Verb**
    - VBA<a><b><c><d> - Verb Auxiliary<a><b><c><d>
        - <a> can be M (Masculine), F (Feminine), or B (Both)
        - <b> can be S (Singular) or P (Plural)
        - <c> can be A (All), F (First), S (Second), or T (Third)
        - <d> can be 1 (Present) or 2 (Past): e.g. VBAMSA1, VBFPA2, VBABST1.
- **Inflected Adverb**
    - AVI<a><b><c> - Adverb Inflected<a><b><c>

      <a>, <b>, and <c> will have values same as noun word class.
- **Uninflected Adverb**
    - AVU – Adverb Uninflected
- **Inflected Postposition**
    - PPI<a><b><c> - Postposition Inflected<a><b><c>

      <a>, <b>, and <c> will have values same as noun word class.
- **Uninflected Postposition**
    - PPU – Postposition Uninflected
- **Conjunction**
    - CJC – Conjunction Coordinating
    - CJS – Conjunction Subordinating
- **Interjection**
    - IJ – Interjection
- **Particle**
    - PTUE – Particle Uninflected Emphatic
    - PTUN – Particle Uninflected Negative
    - PTUH – Particle Uninflected Honorific
- **Vocative Particle**
    - PTV<a><b> - Particle Vocative<a><b>
        - <a> can be M (Masculine), F (Feminine), or B (Both)

- <b> can be S (Singular), P (Plural), or B (Both) : e.g. PTVMS, PTVFP, PTVBB

- **Verb-Part**
  - VBP – Verb Part

The list of tags provided above gives tags for only the words belonging to various Punjabi word classes, ignoring the punctuation marks. The reason for this is that our main aim in this paper is to present a tagset for tagging Punjabi words; for tagging punctuation marks any existing methodology can be followed. In addition to the tags provided above, there are some word-specific tags like PPUNE for ਨੇ *ne*, PPUNU for ਨੂੰ *nu* etc., helpful in checking phrase concord.

This fine-grained tagset consists of around 630 tags. It should be noted that a word class will not have all the possible tags (based on the permutations of abbreviations provided above) for that word class. There are some exceptions in almost every word class. For example, for nouns, instrumental case is only for plural number and ablative case comes with singular number only. For main verb class, "simple causal" and "double causal" come with transitive verbs only. These exceptions are based on the study of inflectional behavior of the Punjabi words. It is not feasible to list explicitly all those exceptions here, and thus this will be ignored.

Punjabi POS Tagger

We are currently working on a purely rule-based approach for POS tagging for Punjabi. One main reason behind choosing rule-based approach over statistical approach is that for the latter, to start with a significant sized POS tagged corpus is required. Keeping in mind the size of the present tagset, a sufficiently large corpus will be required for training to avoid data sparseness problem. However, at present there is no such tagged corpus available for Punjabi that can help us get the reasonable level of accuracy using the tagset provided in section 5.

The approach followed for part-of-speech disambiguation is somewhat similar to the transformation-based learning approach provided by Brill (1992). The main difference between that approach and our approach is that we do not have a learning component at present. All the rules are handwritten based on heuristics and analysis of Punjabi texts. The rules so devised are based on the following general template. In this template, context information from both ~~the~~ directions is considered for defining disambiguation rules. Compare this with those used in transformation-based part-of-speech tagging approaches, as given by Brill (1992, 1994).

Rules Template: *For ambiguity involving tags B and C for a word W having set of tags A, eliminate tag C from tagset A if preceding context is D1 and not D2 and following context is E1 and not E2, otherwise eliminate tag B from tagset A.*

The *rules template* given above states that B and C are both subsets of A. A is a listing of all the possible tags for the word W. D1, D2, E1, and E2 can have zero, one, or more than one POS tags referring to zero, one, or more words in their respective contexts. All these tag formulations are based on regular expressions. As with using regular expressions, it is easy to take more than one proceeding (following) words into account for deciding about the tag of a particular word. At present, the POS rules are based only on the POS tag information, and word level information is not being used.

For performing disambiguation, all the rules in a particular predefined sequence are applied on the input text. If all the conditions specified in a rule about proceeding and following context are satisfied, then accordingly ambiguity is resolved to some extent.

An example of a typical rule to differentiate between direct and oblique case form of a noun is provided below, as rule 1. In Punjabi, the word immediately preceding a postposition needs to be in oblique case; or stated other way, the word in oblique case form must be followed by a postposition, in normal circumstances. Postpositions are the same as what is known as preposition in English: e.g. about, between, on. In Punjabi, these follow the word or phrase whose function these mark in a sentence; therefore the name "postposition."

Rule 1: *In case of ambiguity involving direct and oblique case, change case to oblique if the following word is only in oblique case or it is a postposition.*

We provide the output of morphological analyzer (ambiguous words have tags separated by '|') and POS tagger, when applied to the following sentences:

1. ਸੋਹਣੇ	ਕਾਲੇ	ਚੰਗੇ	ਮੁੰਡੇ ਨੇ	ਜਾਣਾ ਹੈ ।
sohne	kaale	change	munde ne	jana hai.
Handsome	dark	nice	boy	has to go.

Morphological analyzer's output: (AJIMSO|AJIMPD AJ: IMSO|AJIMPD AJIMSO|AJIMPD NNMSO|NNMPD PPU VBMAMSXXXINNA VBAXBST1)

POS tagger's output: (AJIMSO AJIMSO AJIMSO NNMSO PPU VBMAMSXXXINNA VBAXBST1)

2. ਸੋਹਣੇ	ਕਾਲੇ	ਚੰਗੇ	ਮੁੰਡੇ	ਜਾਂਦੇ ਹਨ ।
sohne	kaale	change	munde	jaNde haN.
Handsome	dark	nice	boys	go.

Morphological analyzer's output: (AJIMSO|AJIMPD AJIMSO|AJIMPD AJIMSO|AJIMPD NNMSO|NNMPD PPU VBMAMPXXXINDA VBAXBPT1)

POS tagger's output: (AJIMPD AJIMPD AJIMPD NNMPD PPU VBMAMPXXXINDA VBAXBPT1)

In sentences 1 and 2, the words that are ambiguous, i.e. having more than one POS tag, are ਸੋਹਣੇ *sohne* (handsome), ਕਾਲੇ *kaale* (dark), ਚੰਗੇ *change* (nice), and ਮੁੰਡੇ *munde* (boy|boys). All these words can be in masculine gender, singular number, and direct case. At the same time, these can be in masculine gender, plural number, and oblique case. While applying rule 1 on sentence 1, our POS tagger will try to find a match that satisfies the given condition: i.e. word followed by a word in only oblique case or a postposition. It finds a match for that in ਮੁੰਡੇ *munde* followed by postposition ਨੇ ne, so it will change the tag of ਮੁੰਡੇ *munde* from NNMSO|NNMPD to NNMSO. Then in the next parse, it will change the tag of ਚੰਗੇ *change* (nice) from AJIMSO|AJIMPD to AJIMSO. Similarly in the following parses, tags of ਸੋਹਣੇ *sohne* (handsome) and ਕਾਲੇ *kaale* (black) will be disambiguated in the favor of oblique case i.e. AJIMSO. For sentence 2, there is no match in the first parse for rule 1, so all the ambiguous tags will be disambiguated in favor of direct case for those words.

At present, the design of the rules used by this POS tagger is such that it takes into consideration only the tags of preceding and following words to resolve ambiguity. However, it can easily be modified to go beyond this level to resolve ambiguity, if need be. As discussed above, when rule 1 is applied on sentence 1, though it is designed to take only the following and preceding tags into account, it goes past just following the tag to disambiguate the tag of word ਸੋਹਣੇ *kaale* (handsome) in accordance with ਮੁੰਡੇ *munde* (boy|boys).

Application to Grammar Checking

In this section, we will see how this POS tagset can be applied to grammar checking of Punjabi. Consider the following grammatically incorrect Punjabi sentence (the second line shows POS tags for the words):

1.	ਸੋਹਣੀ	ਮੁੰਡੇ	ਜਾ	ਰਹੇ	ਹੈ
	AJIFSD	NNMPD	VBMAXSS3XINO	VBORMPXXPINIA	VBAXBST1
	sōhṇī	muṇḍē	jā	rahē	hai
	Handsome	boys	are going		

In the above sentence, ਸੋਹਣੀ ਮੁੰਡੇ *sōhṇī muṇḍē* "handsome boys" is a noun phrase. In this noun phrase, the modifier ਸੋਹਣੀ *sōhṇī* "handsome" does not agree with its noun ਮੁੰਡੇ *muṇḍē* "boys" in terms of gender and number. The modifier here should be in masculine gender and plural number, to be in accordance with its noun. The modifier should have the tag AJIMPD instead of the present tag

AJIFSD. For tag AJIMPD, the form of this modifier will be ਸੋਹਣੇ sohne ”handsome,” which will be in accordance with its noun in the above-mentioned sentence. Another grammatical mistake is this section is the auxiliary verb ਹੈ *hai* is in singular number but should be in plural number (i.e. ਹਨ *han*) in order to agree with the subject of this sentence i.e. ਮੁੰਡੇ *muṇḍē* “boys.” It is clear from this discussion that if we want to check agreement from the tags, then those tags need to exhibit all the required grammatical properties of the underlying language, Punjabi in this case. If we use some other tagset that does not distinguish between masculine and feminine nouns and adjectives, or between different case forms of nouns and adjectives, then we will not be able to find the agreement error as we figured out in the above mentioned Punjabi sentence. Therefore, the correct form of the above mentioned incorrect sentence will be:

2.	ਸੋਹਣੇ	ਮੁੰਡੇ	ਜਾ	ਰਹੇ	ਹਨ
	AJIMPD	NNMPD	VBMAXSS3XINO	VBORMPXXPINIA	VBAXBPT1
	sōhṇē	muṇḍē	jā	rahē	han
	Handsome	boys	are going		

Conclusion

In a typical grammar checker, we need to check agreement between various words based on their POS tags, and to check agreement we need a POS tag set that has agreement features for that particular language. It is not possible to use the POS tags designed for some other language for example English, to check agreement in Punjabi sentences. The reason behind this is that those POS tags will not mark the grammatical categories that are required to check agreement in Punjabi words. For example, if we want to check adjective (acting as a modifier) and noun agreement, then for that the tags of both the adjective and noun must exhibit the required grammatical categories i.e. gender, number, and case. If we are using some tag set that does not have this information in the tags for both adjective and noun, then using that we won’t be able to check whether these words agree or if there is an agreement error, for which we must provide some suggestion, while performing grammar checking. Due to these reasons, we required a specialized tag set for Punjabi. This paper proposed a part-of-speech tagging scheme based entirely on the grammatical categories taking part in various kinds of agreement in Punjabi sentences. This tagging scheme has been applied successfully for the grammar checking of Punjabi. The morpho-syntactic features used for devising this fine-grained tagset will not only help in grammar checking activities but also other NLP applications like machine translation. This tagset can also be used for other natural languages that share grammatical features with Punjabi. As mentioned earlier, the POS tagger using this tagset is in the development stage and

new rules are being added, as they are required. This tagger is being used in the project on development of a grammar checking system for Punjabi, and its output is so far satisfactory to the extent that it helps us in grouping words together to build phrase chunks.

References

Atwell, E., Demetriou, G., Hughes, J., Schiffrin, A., Souter, C., & Wilcock, S. (2000). A comparative evaluation of modern English corpus grammatical annotation schemes. *ICAME Journal, 24*, 7-23.

Bharati, A. part-of-speech tagger for Indian languages (POS Tagger). IIIT, Hyderabad, India. Retrieved January 02, 2008 from http://shiva.iiit.ac.in/SPSAL2007/iiit_tagset_guidelines.pdf

Bharati, A. & Mannem, P.R. (2007). Proceedings of IJCAI-2007 Workshop on Shallow Parsing for South Asian Languages, Hyderabad, India. Retrieved January 02, 2008 from http://shiva.iiit.ac.in/SPSAL2007/SPSAL-Proceedings.pdf

Brill, E. (1992). A simple rule-based part-of-speech tagger. In *Proceedings of Third Conference on Applied Natural Language Processing (ANLP-92)* (pp. 152-155). Trento, Italy.

Brill, E. (1994). Some advances in transformation-based part-of-speech tagging. In *Proceedings of the Twelfth National Conference on Artificial Intelligence (AAAI-94)* (Vol.1, pp 722-727). Seattle, WA.

Carlberger, J. & Kann, V. (1999). Implementing an efficient part-of-speech tagger. *Software–Practice and Experience, 29*(9), 815–832.

Carlberger, J. & Kann, V. (2000). Some applications of a statistical tagger for Swedish. In *Proceedings of Fourth Conference of the International Quantitative Linguistics Association* (pp. 51-52). Prague, Czech Republic.

Chandar, D. (1964). *Punjabi bhasha da viyakaran (Punjabi)*. Chandigarh: Punjab University Publication Bureau, India.

Chanod, J. & Tapanainen, P. (1995). Tagging French – Comparing a statistical and a constraint-based method. In *Proceedings of the Seventh Conference of the European Chapter of the Association for Computational Linguistics (EACL-95)* (pp 149-157). Dublin, Ireland.

Cutting, D., Kupiec, J., Pedersen, J., & Sibun, P. (1992). A practical part-of-speech tagger. In *Proceedings of Third Conference of Applied Natural Language Processing* (pp. 133–140). Morristown, NJ, USA.

Daelemans, W., Zavrel, J., Berck, P., & Gillis, S. (1996). MBT: A memory-based part-of-speech tagger-generator. In *Proceedings of the Fourth Workshop on Very Large Corpora* (pp 14-27). Copenhagen, Denmark.

Diab, M., Hacioglu, K., & Jurafsky, D. (2004). Automatic tagging of Arabic text: From raw text to base phrase chunks. In *Proceedings of HLT-NAACL 2004* (pp 149-152). Boston, MA.

Gill, H.S. & Gleason, H.A., Jr. (1986). *A reference grammar of Punjabi*. Patiala: Publication Bureau, Punjabi University, India.

Goldwater, S. & Griffiths, T. L. (2007). A fully Bayesian approach to unsupervised part-of-speech tagging. In *Proceedings of the 45th Annual Meeting of the Association of Computational Linguistics* (pp 744-751). Prague, Czech Republic.

Hardie, A. (2004). *The computational analysis of morphsyntactic categories in Urdu*. Ph.D. thesis, Department of Linguistics and Modern English Language, Lancaster University, Lancaster, UK. Retrieved January 02, 2008 from `http://eprints.lancs.ac.uk/106/`

Joshi, S.S., editor. (2000). *Punjabi bhasha: Viyakaran ate bantar (Punjabi)*. Patiala: Publication Bureau, Punjabi University, India.

Joshi, S.S., Gill, M.S., & Singh, M., editors. (1998). *Punjabi shabad jor kosh*. Patiala: Department of Lexicography, Punjabi University, India.

Khoja, S. (2001). APT: Arabic part-of-speech tagger. In *Proceedings of the NAACL-2001*, Carnegie Mellon University, Pittsburgh, PA, USA. Retrieved January 02, 2008 from `http://archimedes.fas.harvard.edu/mdh/arabic/NAACL.pdf`

Marcus, M.P., Santorini, B., & Marcinkiewicz, M.A. (1993). Building a large annotated corpus of English: The Penn Treebank. *Computational Linguistics, 19*(2), 313-330.

Marques, N. C. & Lopes, G. P. (1996). Using neural nets for Portuguese part-of-speech tagging. In *Proceedings of the Fifth International Conference on the Cognitive Science of Natural Language Processing (CSNLP-96)*, Dublin City University, Ireland.

Oflazer, K. & Kuruöz, İ. (1994). Tagging and morphological disambiguation of Turkish text. In *Proceedings of the Fourth Conference on Applied Natural Language Processing (ANLP-94)* (pp 144-149). Stuttgart, Germany.

Puar, J.S. (1990). *The Punjabi verb form and function*. Patiala: Publication Bureau, Punjabi University, India.

Schmid, H. (1994). Probabilistic part-of-speech tagging using decision trees. In *Proceedings of the First International Conference on New Methods in Natural Language Processing (NemLap-94)* (pp 44-49). Manchester, UK.

Singh, H., Ed. (1988). *Punjabi shabad-roop te shabad-jor kosh (Punjabi)*. Patiala: Shabad Jor Kosh Cell, Punjabi University, India.

Singh, P.P. (2002). *Morphology and Punjabi word-formation (Punjabi)*. Patiala: Madaan Publications, India.

The Linguistics Journal

A Comparison of International and Chinese Journal Article Abstracts: From Move Structure to Transitivity Analysis

Ping Huang
The College of Foreign Languages,
Chongqing University, P.R China
huangping1960@yahoo.com.cn

Biodata

Ping Huang is a professor working at the College of Foreign Languages, Chongqing University, P.R China. She obtained her doctorate in the University of South Australia in 2007. Her recent published research focuses on ESP teaching and the training of university subject teachers to teach bilingually in China. These research interests also involve her in systemic functional linguistics and genre analysis.

Abstract

This paper compares international and Chinese TESOL research article abstracts (RAAs) written in English using Swales' (1981, 1990) move structure model and Halliday's (1994) description of Transitivity Processes and lexis. A small corpus was established with 64 journal RAAs written in English from four international TESOL-related journals and four Chinese TESOL journals written in English in 2003. The results show that (1) the four structural moves of Swales' (1981, 1990) model were evident in both abstract sets but were differently distributed; (2) the distribution of transitivity processes in the journal article abstract moves was related to the move structure; and (3) lexical analysis provides further evidence of Swales' (1981, 1990) move structure. The research suggests the need for TESOL practitioners to consider these factors in preparing RAAs.

Key words: genre analysis, transitivity process, move analysis, lexis

Introduction

Abstracts are a paragraph condensing for readers the main focus in a research article. Usually abstracts follow the structure of the article. Up to now there has been research on the genre of academic article abstracts (e.g., Gibson 1993; Kaplan et al. 1994; Anderson & Maclean 1997; Martin 2003), but this work considered only English or European abstracts in specialized fields. Few published studies have compared the genres used in Chinese and English journal article abstracts (but

see Huang, 2008). Most importantly, genre analysis of research article abstracts has not focused on their structural moves or language use.

Swales (1981) claims that there is a four-move structure in the research article introduction: introduction, method, results and discussion (IMRD). This move structure is replicated in abstracts according to other researchers (Salager-Meyer, 1992; Bhatia, 1993; Martin, 2003; Lores, 2004; Samraj, 2004). Swales (1990) later adapted his research article introduction move structure to accommodate social science, which he claims is different from experimental research due to the field's focus on literature review rather than research methods. Swales offers instead the rhetorical pattern of a create-a-research-space structure (the CARS model, see p. 175), which has only three moves but, which in his view, can still represent the different genres of research article introduction. Bhatia (1993), however, researching research article abstracts (RAAs), confirms Swales' earlier, 1981 model by arguing that RAAs, which reflect the organization of the research article itself, should have four moves: purpose, method, results and conclusion (PMRC). Samraj (2004) and Lores (2004) found most abstracts they analysed fitted Swales' (1981) IMRD model with only a small portion revealing the CARS model. Different again, Hyland (2000) separated the writer's statement of research purpose from the introduction move, categorising abstracts into five moves: introduction, purpose, method, product and conclusion. In China, there have been also some researches on abstract writing (e.g., Ju, 2004; Zhang and Zu, 2006; Yu and Liang, 2006; and Huang 2007, on its application in language teaching); and Ge and Yang (2005) also suggest a five-move abstract structure (background, previous research, method, result and conclusion).

Based on such studies, Swales' 1981 and 1990 models were combined in order to compare RAAs in international and Chinese TESOL journals published in English. However, his work and that of others cited here (e.g., Bhatia, 1993; Hyland, 2000; Samraj, 2004; Lores, 2004; Ge and Yang, 2005) focus only on move structure analysis. Move analysis can only show how RAAs are organized at the macro-level; it cannot explain how language is used.

Transitivity and lexical analyses were therefore also conducted to examine the data at a more micro level. Transitivity has been extensively studied in stylistic and critical linguistics (Kennedy, 1991; Simpson, 1993; Halliday, 1994; Stubbs, 1996) and also in scientific discourse. Eggins (1994), based on Halliday's work (1994), claims that transitivity[1] provides alternative syntactic resources for the representation of Participants. Halliday (1994) identified three forms of presentation of experience:

[1] Initial capitals for key syntactical terms and terminology used in this article follow Halliday's systemic functional theory (see Halliday, 1994).

the "outer" experience, represented as actions or events; the "inner" experience, represented as reactions and reflection on the outer experience; and "generalization", represented as a relationship of one form of experience to another. Halliday (1994) believed that these forms of representation can be mainly realized in material processes (e.g., measure, store, use); mental processes (e.g., believe, expect, understand), relational processes (e.g., be, result), verbal processes (e.g., argue, describe, explain, propose, report), existential processes (e.g., appear, be, exist, occur), and behavioural processes (e.g., gaze, look at, smile). Behavioural processes, however, rarely appear in academic writing. This proved to be the case in my data, so behavioural Processes were subsequently omitted in my analysis.

Following the transitivity analysis, a lexis analysis was conducted, using a concordance program (www.concordancesoftware.co.uk), a software program providing concordance utilities for text analysis. This analysis compared the actual words used in each move in the Chinese and international RAAs in the research corpus.

Therefore, this study drew on Swales' 1981 and 1990 models and Halliday's (1994) transitivity system to identify and compare the frequency and distribution of moves in RAAs published in international and Chinese TESOL journals in English; explain the use of key aspects of language in each move; and contribute to a currently small but influential area of work. The move analysis (mainly based on Bhatia's model) and the transitivity and lexical analyses are expected to provide useful information for international linguists and Chinese TESOL practitioners on typical features of TESOL RAAs written by Chinese L1 speakers. The combination model used is represented in table 1.

Table 1 Combination Model for Research Article Abstracts Analysis

Macro analysis	**Micro analysis**
• **Move 1: Introducing purposes** 1.1 background (optional) 1.1a stating topic or generalisation 1.1b gaps or problems to be tackled 1.2 indicating the purpose of this Research **Move 2: Showing methodology** 2.1 showing the methods used 2.2 showing the scope of research or the previous relevant literature (optional) **Move 3: Describing results** 3.1 showing or summarizing the most important findings in	• **1. Transitivity System** ● material ● mental ● verbal ● existential ● relational **2. Lexis analysis** Often used Processes and Epithets[2] in each move

[2] The term Epithet is used in this article to refer to more expressive and affective words (as opposed to 'plain' words).

the research **Move 4: Drawing conclusions** 4.1 making suggestions 4.2 implications for doing further research (optional)	

Developed from Swales' (1981, 1990) work and Halliday's (1994) work.

Based on this model, this research on the collected data addressed the following questions:

- To what extent do the TESOL RAAs correspond to the combined move model based on Swales (1981, 1990)?
- What types of Processes (using Halliday's (1994) transitivity system) can be found in the data?
- What are the most common lexical processes and epithets used in the data?

This article reports and discusses the findings on these questions.

Methodology

The following criteria and points were determined and followed to select the journals for comparison: First, the journals were central reading in both international and Chinese TESOL fields. Second, the selection of the RAAs in the selected journals was random, based on the rule of selecting 1 in every 3 RAAs in the journal issues included. Since some journals, such as *The Journal of ELT, Foreign Languages*, and *Foreign Language Teaching and Research*, contain more articles than the other journals in each issue, the final numbers of abstracts selected from each journal resulted in different numbers of abstracts from the different journals.

Third, the international journal RAAs were those written by authors from different countries in the chosen four international journals (*The ESP journal*, *The ELT journal*, *Applied Linguistics*, and *TESOL Quarterly*), which publish both native and non native speakers of English from all parts of the world. The four selected Chinese journals are all presently the core, key journals in the Chinese TESOL field (Gao et al., 2001): The *Modern Foreign Languages* and *Foreign Languages* journals often publish articles which introduce international research and theory to Chinese readers and report basic research or applied research, while in *Foreign Language World* and *Foreign Language Teaching and Research*, some practical research and applied research studies are often published. These eight journals were selected as the research corpora because they are important in both international and Chinese TESOL fields (Gao, 1998). In the Chinese journal set, all abstracts were written in English by the Chinese authors themselves.

Fourth, since TESOL journals publish different kinds of articles, such as empirical studies, review papers, and critiques, this study sought to select RAAs in both sets and exclude review papers or critiques. Finally, one volume from each journal was selected to form the data corpus: that is, one year (2000) of published issues from each of the eight journals.

Based on the above points, all the articles of these eight journal issues for the 2000 volumes were downloaded, and then one in every third RAA was chosen for analysis in order to avoid selection bias. The result was that six RAAs from *The ESP journal*, 11 from *The ELT journal*, five from *Applied Linguistics* and five from *TESOL Quarterly* were analysed. The total number of the international RAAs selected and analysed was 27. In the Chinese TESOL journals, 10 RAAs from *Foreign Language Teacher and Research*, eight from *Foreign Language World*, four from *Modern Foreign Languages* and 15 RAAs from *Foreign Languages* were analysed. The total number of the Chinese RAAs selected and analysed was 37.

Findings

This section first presents the findings from the move analysis and then those of the transitivity and lexis analyses.

MOVE analysis

Table 2 summarizes the results of the move comparison for both sets of RAAs based on Swales' (19981, 1990) rhetorical structure.

Table 2 shows that the distribution of Move 1 varied, although there was a close similarity in the frequency and distribution of Move 1.2, confirming the importance of stating the purpose of an article in abstract writing. However, in the Chinese set, 56.7% of RAAs contained move 1.1 while only 29.6% of RAAs in the international set did so. This implies that Chinese authors liked to begin with more background information than authors in the international set, some of whom omitted it or wrote less on it.

Table 2 Comparison of international and Chinese sets, Move distribution

Journal set	Move 1		Move 2		Move 3 Results	Move 4 Suggestions / Implications
	1.1 Background	1.2 Purpose	2.1 Method	2.2 Scope/literature		
International	29.6% (8)	74.1% (20)	88.8% (24)	25.9% (7)	92.5% (25)	25.9% (7)

Chinese	56.7% (21)	75.7% (28)	48.6% (18)	21.6% (8)	78.3% (29)	10.8% (4)

In the remainder of this section, typical examples of differences in moves in the two RAAs sets are provided.

Analysis in Move 1

The following two abstract examples (1a and b) illustrate differences for Move 1 between the international and Chinese sets which reflect differences in the focus of research in TESOL between the international and Chinese TESOL fields.

Example 1a (International set)

(Move 1.2) This paper investigates ways students engage in scientific reasoning practices through the formulation of written argument…. (*Applied Linguistics* 2003 vol. 24, no. 1, p. 28)

Example 1b (Chinese set)

(Move 1.1) Cognitive Linguistics pays special attention to the concept of construal in linguistic encoding ,and relates expression to the way situation is conceptualized. Different construals result from three factors : perspective , foregrounding and frame They work together to influence the mapping of the real world onto lexicogrammar. (Move 1.2) This paper aims to argue that context can become the domain of cognition, motivates frame and knowledge base, and guides the speaker to choose perspectives and types of foregrounding to produce texts, since the production of texts in discourse has close links with context. (*Foreign Language Teaching and Research*, vol.35, no.2, 1 p. 97)

Most RAAs in the international set directly stated the research purpose as in example 1a. In contrast, in the Chinese set, see example 1b, Move 1 formed the whole abstract, in which the authors focused on explaining that the present research work and its problems was the purpose of the research article. While both abstracts stated the purpose of the research articles, the Chinese RAA indicates that the focus of the article was the context of research rather than the conduct of specific research. Thus, the RAAs reflect different approaches to writing about research.

Analysis in Move 2

Method information (Move 2) is differently distributed across the two sets of abstracts. 88.8% in the international set contained Move 2.1, while only 48.6% in the Chinese set had this move. However, on linking the article to previous research literature (Move 2.2), although the percentage in international RAAs was still higher than in the Chinese set, the difference was much smaller (see Table 2): 25.9% in the international set, 21.6% in the Chinese set. This suggests that the Chinese authors highly valued literature review as a form of research.

The analysis of Examples 2a and 2b illustrates typical differences in Move 2 between the international and Chinese sets of abstracts. In example 2a, the author introduced the research by explaining the method; whereas in example 2b, the RAA consisted only of 2 moves: Move 1.2 and Move 4, which suggested a research method as an outcome of research. In other words, method was the focus of this research. These two examples again illustrate two different research orientations, which influenced the writing of both the research articles and the RAAs.

Example 2a (International set)

> (Move 2.1) Students enrolled in an intermediate level language course were paired with heritage speakers in order to collaboratively solve a two-way jigsaw task. The transcripts of their interactions were examined for points of negotiation, given the general prediction that negotiations of meaning will stimulate both groups to notice their linguistic gaps and modify their respective output accordingly…. (*Applied Linguistics, vol. 24*, no. 4, p. 519)

Example 2b (Chinese set)

> (Move 1.2) The present article analyses and discusses the concepts of semantic prime and cultural script in natural semantic metalanguage theory developed by Wierzbick. *(*Move 4*)* It is pointed out that semantic prime can provide new methods for semantic analysis and has significant roles in analysing the core meanings of languages. It is suggested the concept of cultural script and its application are useful in discovering the semantic universals entailed in the various complicated language phenomena and in exploring the different cultural traits; cultural script can also expand the horizon in cross-cultural communication studies….. (*Foreign Languages, vol. 147,* no.5, pp. 27–34)

Analysis in Move 3

Examples 3a and 3b illustrate the results in the international and Chinese abstract sets as represented by Move 3. Although example 3a provided a longer summary of the research results than example 3b, both gave research result details.

Example 3a (International set)

> (Move 3) Results reveal that L2 learners' performance shows its significance only when their error types, rather than error rates, are considered. The forty participants' choice of the simplification strategies highly confirms predictions made from L1 as well as L2 research results or principles concerning the four factors tested. As hypothesized, the participants' proportion of epenthesis to deletion is higher in more formal styles than in less formal styles, for high proficiency students than for the low proficiency group, for female speakers than for their male counterparts. As for the interlocutor factor, a significant difference is found between female students' speech to their native-speaker teacher and their non-native-speaker classmate *(Applied Linguistics, vol. 24,* no.4, p. 439).

Example 3b (Chinese set)

> (Move 3) The statistics show that the experimental group has demonstrated consistent superiority over the control group in test results. Of the three different multimedia models, the model which combines teacher's presentation with learners' production has been shown to have advantage over the learners' autonomous learning model and the teacher centerd instruction model…. (*Foreign Language World vol. 96,* no.4, p. 37).

Examples 3a and 3b reflect similar presentation of results, suggesting that summarizing results in RAAs follows similar conventions in both research journal settings.

Analysis in Move 4

Move 4 has two possible forms: giving implications or suggestions. The percentage of this move in both the international and Chinese sets was much lower than with the first three moves: specifically, the percentage for the international set was 25.9%; whereas for the Chinese set it was only 10.8%. Few abstracts in the Chinese set contained this move. Examples 4a and 4b illustrate this move for both sets when Move 4 is included.

Example 4a (International set)

(Move 4.1) In general, and despite the occasional use of synonyms, these findings suggest that the conventional style-manual exhortation to use consistent terminology is sensible advice grounded in native-English-speaker practice. (Move 4.2) Applications of these findings in the second-language academic writing classroom are briefly discussed (*The ESP Journal*, 2003, vol. 22, no. 2, pp. 113-130).

Example 4b (Chinese set)

…(Move 4.1) These findings suggest that LLSI has a facilitative effect on Chinese EFL beginners' listening learningn process both linguistically and extra-linguistically, and that listening learning strategies are teachable and learnable *(Modern Foreign Languages, vol. 26,* no.1, pp. 48-58).

Most abstracts in the Chinese set had either a very long move 4 or none at all.

Some variations of move structure

Sometimes moves were combined in the RAAs, probably because of the word limit required by the journal. For example, two moves may be combined in one complex sentence. These moves are called reduced moves (Weissberg and Buker, 1990). Example 5 shows this in the Chinese set.

Example 5 (Chinese set)

(Move 1.1) The information indices of the interpretation quality evaluation are usually regarded as the most important basis for measuring the faithfulness of translation. The information units, namely, the units of measurement of the indices, are essentials of evaluation. Nevertheless, up to now, there has never appeared any systematic exposition concerning the identification as well as the definition of this kind of units. (Move 1.2 and Move 2.1) This paper will, on the strength of the exposition of the relevant subjects, discuss the information units of the interpretation quality evaluation in terms of the essence of interpretation, the distinction between the units of measurement and the units of translation, the definition of information units and the relationship between information units and discourse analysis. (Move 2.1) This paper, with the results of the theoretical research serving as an guidance for interpretation evaluation practice, attempts to explore a set of original evaluation methods which are to be objective, scientific, easy-to-handle and feasible (*Foreign Languages, vol. 147 ,* no. 5, pp. 75–80).

In the corpus, a number of reduced moves were found in both sets of RAAs. Table 3 shows the distributions.

- **Table 3 International and Chinese sets, reduced moves**

Journal set	Moves 1 & 2	Moves 2 & 3	Moves 3 & 4	Moves 1, 2 & 3
International set (no=27)	7.4% (2)	–	–	3.7% (1)
Chinese set (no=37)	27% (10)	2.7% (1)	5.5% (2)	2.7% (1)

In total, there were only 3 RAAs in the international set using reduced moves; two abstracts combined Moves 1 and 2, and one abstract combined Moves 1, 2 and 3. However, in the Chinese set, 14 of 37 RAAs had reduced moves (38%): 10 abstracts combined Moves 1 and 2 (27%). One abstract combined Moves 2 and 3. Two abstracts combined Moves 3 and 4 and another abstract, Moves 1, 2 and 3.

Clearly, move structure influences how information can be provided in a text. Transitivity analysis of moves can help explain how language functions at move level.

Transitivity Analysis

Transitivity is demonstrated by the kind of process used at move level (see Halliday, 1994; Eggins, 1994). In this study, the process types were compared, and percentages for each process type per move were calculated in both sets. The analysis was conducted to investigate the main processes' action in each move, so tense, voice, mode, and complex verbal phrases were not otherwise analyzed. The distribution and use of five processes were analysed based on Halliday's (1994) work. The total number of each process and its type were calculated as a percentage of the total number of clauses, 290 in the international set, and 372 in the Chinese set. Percentages of each process type across the four moves were also calculated.

Table 4 shows that the distribution across the five process types is rather similar in both sets, except for relational processes. Examples below illustrate this. As already stated, behavioral processes were excluded from the statistical analysis due to the low percentage of occurrence in both the

international and Chinese RAAs. Material processes were the most frequent, 57.2% (166) in the international set and 53.2% (198) in the Chinese set.

Table 4 Comparison of frequency of Processes in the international & Chinese sets

Processes / Moves	International set (n=291)					Processes / Moves	Chinese set (n=372)				
	Material (n=166, 57.2%)	Verbal (n=45, 15.5%)	Relational (n=41, 14.1%)	Mental (n=34, 11.7%)	Existential (n=4, 1.4%)		Material (n=198, 53.2%)	Verbal (n=41, 11%)	Relational (n=82, 22%)	Mental (n=42, 11.3%)	Existential (n=9, 2.4%)
1 (n=79)	48% (38)	14% (11)	24% (19)	10% (8)	4% (3)	1 (n=158)	51% (81)	13% (20)	21% (33)	13% (21)	2% (3)
2 (n=59)	64% (38)	12% (7)	7% (4)	17% (10)	–	2 (n=100)	58% (58)	12% (12)	18% (18)	10% (10)	2% (2)
3 (n=122)	66% (80)	14% (17)	9% (11)	11% (14)	–	3 (n=92)	52% (48)	7% (6)	26% (24)	11% (10)	4% (4)
4 (n=31)	32% (10)	32% (10)	27% (8)	7% (2)	3% (1)	4 (n=22)	50% (11)	14% (3)	32% (7)	5% (1)	–

In the international set, verbal processes were somewhat further behind as the next (15.5%, 45) with relational processes close behind as the third (14.1%, 41), while in the Chinese set relational processes ranked second (22%, 82). The percentages of mental processes in both sets are similar, but the ranking is different, in the international set ranking fourth (11.7%, 34) and in the Chinese set ranking third 11.3% (42), similar to verbal processes (11%, 41). Existential processes occurred relatively infrequently in both sets. In the Chinese set, the distribution is 2% (9), while in the international set it is only 1% (3). Examples 6a–11 illustrates how processes were used in both sets.

Material processes played a very important role in all moves in both sets. The bolded words in Move 1, Move 2, and Move 3 in Example 6a show the frequency of material processes in the international set. The underlined words indicate the other processes analyzed in this abstract. Eight material processes were identified in this abstract, compared with six other processes.

Example 6a (International set)

(Move 1)The focus of the present paper <u>is</u> on the measurement of lexical richness. Lexical richness is often **measured** either by the traditional type-token ratio (TTR) or by its square root variant, the index of Guiraud. These two measures **combine** characteristics of type/token related measures with the notion of different layers of frequency/productivity in the lexicon (see Laufer

> and Nation 1995). (Move 2) We **computed** indices for the lexical items used in an oral text production task by two groups of Turkish-German bilinguals. One group has a German dominant bilingual competence; the other group **consists** of Turkish dominant bilinguals. (Move 3) It will be **shown** that the proposed measures for advanced lexical richness **trace** the characteristics of the bilingual profiles of the groups of subjects better than the traditional measures. Since the two languages involved in this study are typologically quite different, the additional technique of standardizing scores (z scores) was required to **draw** comparisons between the two languages. The conclusion is that the two proposed indices of advanced lexical richness, and especially the Guiraud Advanced, **yield** the clearest results. The new measures can be readily **computed** and are useful in the context of linguistic research as well as in classroom settings. (*Applied Linguistics, vol.24*, no.2, p. 197)

In Examples 6b and 6c, material processes, such as "analyze", "apply", and "use", are most frequently used in Move 2 to realize the actions when the researcher conducts the research. Both Chinese and international sets share the same features in Move 2.

Example 6b (international set)

Two papers, chosen as exemplary by the course instructor, were **analyzed** in three ways: First, genre analysis was **applied** to identify the rhetorical moves used by the authors to complete the academic task. Second, a previously developed model of epistemic generality was **used** to uncover the relationships of theoretical assertions and empirical data. Third, an analysis of lexical cohesion **mapped** the recurrence and relationships of topics throughout the student papers (*Applied Linguistics, vol. 24* , No.2, p. 197).

Example 6c (Chinese set)

> (Move 2. 1)… 'small words' are **analysed** in terms of their types , ranges , frequency and discoursal / interactional functions. Comparison is **made** between more fluent and less fluent Chinese EFL speakers, ... (*Foreign Language Teaching and Research, vol. 35*, no. 6, p. 446).

Relational processes occurred quite often in Move 1 and Move 4 in both sets. In Move 1, the research topic is often introduced. However, Chinese writers preferred to use relational processes more than international writers, therefore, in the Chinese set, relational processes rank second (see Table 4). Examples 7, 8a and 8b illustrate how relational processes are used in both sets.

Example 7 (International set)

(Move 1.1)Teachers, lecturers, heads of schools and departments, directors of studies, and managers, **are** all familiar with the idea of quality, … (*The ELT Journal, 2003 vol.57, no. 3,* pp. 234-241).

Example 7 illustrates the relational process is used in Move 1 to explain the background information, while example 8a and 8b show that relational processes are often used in Move 4 to show the effect or significance of the research. However, the difference between the international and Chinese sets is illustrated in example 8a, where both "be" and "have" are used while in example 8b only "be" is used.

Example 8a (International set)

(Move 4.1) The findings **suggest** that factual reference sources **have** an important role to play in translation activities, and that process-oriented classroom approaches **are** necessary to detect overtly correct solutions based on insufficient cultural knowledge (*The ELT Journal, vol. 57,* no. 2, pp. 167-174).

Example 8b (Chinese set)

(Move 4.2) The paper concludes that computer assisted instruction **is** an effective medium of language teaching, …*(Foreign Language World, vol. 96,* no. 4, p. 37).

Verbal processes were used in RAAs which feature discussion and definition. Examples can be found in examples 8a and 8b above, namely "suggests" and "concludes". Example 9a shows a Move 3 containing a verbal process (as well as a mental process, which is underlined).

Example 9a (International set)

(Move 3) One of the main findings we have **reported** in the context of these medical gate keeping encounters <u>concerns</u> the co-existence of different modes of talk (*Applied Linguistics, vol.24,* no.3, p. 338).

Verbal processes in the international set were most common in Move 4, 33% (10). Example 8a has a typical example, "suggest". However, in the Chinese set, verbal processes are often found in Move 1 and Move 4 besides in Move 3. Examples 9b demonstrates its use in Move 4.

Example 9b (Chinese set)

> (Move 4.1) Moreover, the paper **suggests** such an idea that if Halliday's metaphor of mood is introduced into Chinese, the classifications of Chinese mood can be simplified. (*Foreign Languages, vol. 146.* no.4, pp. 46—53)

Mental processes were used most in Moves 1 and 3 (10%) in both the international and Chinese sets. In Move 1, mental processes were often used to show the researcher's research approach: for example, "examine", "investigate" or "explore" (see Example 1a). Examples 10a and 10b illustrate how mental processes were realized in Move 3.

Example 10a (International set)

(Move 3) Results reveal that L2 learners' performance shows its significance only when their error types, rather than error rates are considered….. As for the interlocutor factor, a significant difference is found between female students' speech to their native-speaker teacher and their non-native-speaker classmate (Applied Linguistics, vol. 24, no. 4, p. 439).

Example 10b (Chinese set)

(Move 3) It is **found** that 1 :1 parallel sentence pairs comprise the majority of the data ,... (*Foreign Language Teaching and Research, vol. 35, no. 6,* p. 410).

Example 10b shows one mental process, "found", to show findings, and one relational process, "comprise", to express the writer's interpretation of the research.

Existential processes were least common of the five processes in both sets. In this study, existential processes were mainly found in Move 1 and Move 4 in the international set. Although in the Chinese set, some were present in Moves 2 and 3 as well. The reason for most appearing in Moves 1 and 4 is that these moves function to provide the research background information and the implications, and the "there + be" structure was relatively frequently found in these moves. Examples 11a and 11b illustrate how the existential process "There be" was used in Move 1 and Move 4.

Example 11a (International set)

(Move 1.1) In the last two decades **there has been** a growing volume of discourse-based research in a wide range of professional settings (*Applied Linguistics, vol. 24*, no. 3, p. 338).

Example 11b (international set)

(Move 4.2) **There is** a mutually supportive relationship for students between making journal entries and classroom performance. (5) Journals <u>make</u> possible an element of one-to-one instruction (*ELT Journal Vol 57*, No. 3, pp. 269-277).

Example 11b shows both existential "There is" and material "make" processes were used in Move 4. Example 11c illustrates the use of existential processes in Move 3 in the Chinese journal abstracts.

Example 11c (Chinese set)

(Move 3) With respect to forms, both English and Chinese **have** the incongruent forms of mood. In English the incongruent forms of mood usually **exist** in the hypotactic clauses, whereas in Chinese they usually **exist** in the paratactic clauses (*Foreign Languages, vol. 146. no. 4*, pp. 46–53).

Although there were fewer Move 3s in the abstracts of the Chinese set, Example 11c shows how existential processes and relational processes are typically used in Move 3 in those abstracts when they do appear.

In the following section I present the lexical analysis of my study.

Lexical Analysis

The lexical analysis was conducted by first using the concordance software program to search for the most commonly used words in each move; the results of the analysis are shown in Table 5.

The analysis included only three process types because lexis was selected based on three criteria: first, the examples had to be main processes in each move; Second, each process had to appear at least twice in one of the journal sets; and, third, since "be", which could include "there + be", was complicated to calculate using concordance (for example, its various uses in passive voice and tense constructions, and its potential use as either a relational process (e.g. as in "be essential") or existential process (e.g. "There be"), forms of "to be " were excluded (see Table 5).

Table 5 Comparison of lexical choice of Processes used in each move in both sets

Lexis	**Move 1**				**Move 2**		**Move 3**						**Move 4**	
	Verbal		**Mental**		**Material**		**Material**		**Mental**		**Verbal**		**Verbal**	
	1*	2**	1	2	1	2	1	2	1	2	1	2	1	2
Investigate	–	–	8	6										
Explore	–	–	6	5										
Examine	–	–	2	4										
Present	8	2												
Review	4	4												
Describe	2	2												
Argue	–	4											2	–
Use					13	13								
Take					4	–								
Apply					2	2								
Conduct					–	2								
Adopt					–	2								
Compare					–	2								
Show							8	1	–	–				
Reveal							2	1	–	–				
Conclude							–	–	2	4			–	4
Find							–	–	4	9				
Consider							–	–	4	–				
Suggest							–	–	–	–	2	–	6	2

* 1 = International journal set ** 2 = Chinese journal set

Table 5 shows mental and verbal processes appeared very often in Move 1, while material processes were infrequent in Move 1. The reason why mental and verbal processes often appeared in Move 1 is that the research purpose and background information are presented in this move. Since Move 1 focuses on the research purpose, mental processes, such as “investigate” , “examine” and “explore”, and verbal processes, such as “present”, “review”, “describe”, and “describe” appeared very often in both sets.

Since Move 2 focuses on method, action (how the author did the research) was stressed and thus material processes were used frequently in Move 2. Table 5 shows that material process, “use”, was common in both sets in Move 2. Other verbs with similar meanings to “use” in Move 2 were also used in quite a few abstracts, such as “adopt”, or “apply”.

Since Move 3 mainly presents results, material processes, such as “show”, “reveal” or “conclude” were often found, and mental processes, such as “find”, “consider” and “suggest” appeared frequently as well. While in Move 3, “show” was the most common material process, “find” and “consider” were quite often found. However, there were some differences between the two sets. In the international set, processes such as “show” (8) and “reveal” (2) were more often used than in the Chinese set, while “find” was more common in the Chinese set (9) than in the international set (4).

Verbal processes appeared frequently in Move 4, because suggestions and implications are found in this move. However, “suggest” was more often used in the international set (6) than in the Chinese journal set (2). Authors in the international set preferred to use “argue”, while “conclude” was preferred in the Chinese set.

Table 6 summarises the most commonly used epithets in the two abstract sets. The list was derived from the concordance software search. The Chinese data are ranked and the international data compared with them. The bracketed numbers in the columns provide separate rankings for these data. The Chinese TESOL abstracts tended to contain more epithets than those in the international set. This may be because more of the Chinese RAAs described their research, while the international abstracts focused on the data and results to explain the research. For example, “cognitive” and “foreign” were used more often in the Chinese set. The frequency of “foreign” may be because in this set English was the foreign language and thus was the focus of the research. The Chinese abstracts had higher frequencies of “important”, and “significant” than those in the international set. “Necessary” was similarly distributed in both sets. These epithets are more common in both sets than other epithets because the abstracts emphasised the importance and necessity of the research reported.

- **Table 6 Comparison of most common Epithets**

N	Epithets	Occurrence in the Chinese abstracts	Rank	Occurrence in the international abstracts	Rank	n
1	Foreign	83	(1)	–	–	
2	Cognitive	46	(2)	3	(7)	1
3	Different	41	(3)	20	(1)	2
4	Modern	22	(4)	–	–	
5	Effective	21	(5)	19	(2)	3
6	Important	14	(6)	5	(5)	4
7	Cultural	12	(7)	7	(3)	5
8	Significant	10	(8)	4	(6)	6
9	Social	10	(8)	–	–	
10	Conceptual	9	(9)	1	(9)	7
11	Functional	9	(9)	–	–	
12	Theoretical	9	(9)	2	(8)	8
13	Conventional	8	(10)	–	–	
14	Contrastive	6	(11)	–	–	
15	Higher	5	12)	–	–	
16	Necessary	5	(12	3	(7)	10
17	Particular	5	(12)	2	(8)	11
18	Traditional	5	(12)	6	(4)	12
19	Derivational	4	(13)	–	–	
20	Stereotypical	4	(13)	–	–	
21	Essential	3	(14)	–	–	
22	Spiritual	3	(14)	–	–	
23	Professional	–	–	5	(5)	13

-

Discussion

The previous two sections presented the move, transitivity and lexis analyses, which together suggest that abstracts in the corpus tend to follow relatively similar generic structures (see also Swales, 1981; Bhatia, 1993). That is, the RAAs in both two journal sets tend to correspond with the combined

model based on Swales' (1981, 1990) rhetorical structure. In addition, choice and distribution of epithet had some similar features in both sets. There were linguistic differences, however and these differences may be explained due to cultural reasons. The two main linguistic differences were as follows:

- Indirectness vs directness of expression
- Epithet vs plain words

Indirectness vs directness

The Chinese and English have different language systems which reflect their different cultural histories. Consequently, Chinese people have different models and standards for writing; these affect their academic writing. This study agreed that the Chinese TESOL practitioners' academic writing tended to be inductive (Brick, 2006). This was evident in Move 1 in the Chinese journal set, in which the RAAs had a higher proportion of background moves (Move 1.1, 56.7%; Table 2), while the international RAAs had only 29.6% for Move 1.1 (see Table 2). This long introduction move may be due to the tendency of Chinese authors to write more indirectly than directly (Brick, 2006). This practice at least partly explains why Chinese writers have been described as having less argument than western writers (Kaplan, 1966; Gao, 1998; Chu, 2002; Connor, 2002, 2004). The processes in the different moves provided further evidence for this difference. Table 4 shows that different processes were used more often in Move 1 and 4 in the Chinese set than in those in the international set (see percentages for the different processes in Table 4). This might be that in writing up the abstract, the Chinese research authors are likely to focus more on background information and the implication of their studies than on the methodology and the actual findings of their research.

Finally, evidence of the different generic abstract structures in the two sets is provided by the analysis of reduced moves (see Table 3). More abstracts in the Chinese journal set had reduced moves, particularly in the first two moves (27%, Move 1 with Move 2). This finding of the reduced Move 1 and 2, and the reduced Move 1, 2 and 3 showed that the Chinese authors focused more on the background information than on the method move, and the reduced Move 3 and 4 showed that they focused more on Move 4, the suggestions or implications because of the way the moves were combined. The international set had no reduced moves for method (Move 2) or results (Move 3), suggesting that international authors found these moves too important to reduce.

Epithet vs plain words

Tables 6 showed how Epithets were used differently in the two sets of abstracts. In the Chinese journal set, many more epithets were used than in the international set. Epithets such as “essential”, “important”, “effective” and “significant” were often found at the beginning of RAAs in the Chinese set; whereas there were fewer epithets overall in the international journal set. This result suggests, on the one hand, that Chinese authors represented in this study tended to evaluate the importance of their study. On the other hand, the lexis analysis in the international set revealed greater focus among those authors on verbal and mental processes (see Tables 4 and 5) which may suggest a belief in the dynamic, fluid nature of research results, that is, of findings which can be questioned.

Conclusion

This study conducted move, transitivity and lexical analyses of 64 international and Chinese TESOL RAAs written in English. The four structural moves of Swales’ model were evident in both abstract sets but were differently distributed, such as the longer background information in the Chinese RAAs than in the international RAAs. The transitivity and lexical analyses provided evidence that Chinese authors write more indirectly and use more epithets than the authors in the international set, though there are no striking differences in how both sets of authors construct transitivity in both sets. However, the differences are sufficient to suggest implications for Chinese TESOL scholars who wish to publish in English-medium journals.

Acknowledgements

I am most indebted to Associate Professor Jill Burton, for her insightful ideas, expert direction and excellent supervision, and patient guidance. Without her help, this publication could not be realized. My thanks also to the anonymous reviewers whose helpful comments helped me improve this manuscript.

References

Anderson, K. & Maclean, J. (1997). A genre analysis study of 80 medical abstracts. *Edinburgh working papers in applied linguistics, 8* (1), 23-33

Bhatia, V. K. (1993). *Analysis genre: Language use in professional settings*. London: Longman.

Brick, J. (2006). *Academic culture: A student’s guide to studying at university*, NCELTR: Macquarie University.

Chu H-CJ, Swaffar J & Charney D.H.J. (2002). Cultural representations of rhetorical conventions: The effects on reading recall. *TESOL Quarterly, 36*(4), 511–541.

Concordance, (2003). www.concordancesoftware.co.uk.

Connor, U. (2002). New direction in contrastive rhetoric. TESOL Quarterly, 36(4), 493-510.

Connor, U. (2004). Intercultural rhetoric research: beyond texts. Journal of English for Specific Purposes, 3(4), 291-304.

Eggins, S. (1994). An introduction to systemic functional linguistics, London: Pinter.

Flowerdew, J . (2001) . Attitudes of journal editors to nonnative speaker contributions. TESOL Quarterly , 35(1) , 121–150.

Gao, M.C.F. (1998). Influence of native culture and language on intercultural communication: the case of PRC student immigrants in Australia, 26th to 28th 1998 symposium of intercultural communication, The department of linguistics, Gothenburg University, With support from KIM and the immigrant institute in Boras.

Gao, Y.H, Li, L.C & Lü, J. (2001). Trends in research methods in applied linguistics: China and the West, *English for specific purposes*, *20(*1), 1-14

Ge, D.M. & Yang, R.Y. (2005) A genre analysis of research article abstracts, *Modern Foreign Languages, 28*(2), 38-146.

Gibson, T.R (1993). Toward a discourse theory of abstracts and abstracting. *Monographs in systemic linguistics*, 5, 1–2. Nottingham: University of Nottingham.

Halliday, M.A.K. (1994). *An introduction to functional grammar* (2nd edn). London: Arnold.

Huang, P. (2007). *Genre Analysis of Article Abstracts in International and Chinese TESOL Journals Written in English and Its Use in Teaching English for Academic Purposes in a Tertiary Institution in China.* Unpublished Ph D Thesis. The University of South Australia.

Huang, P. (2008). *Genre Analysis of Article Abstracts Written in English in International and Chinese TESOL Journals and Its Use*, China: Sichuan People's publisher.

Hyland, K. (2000). *Discipline discourse: Social interactions in academic writing*. London: Longman.

Ju, Y. M. (2004). Genre analysis and academic research articles in English and Chinese. *Foreign Languages 2*, 32-36.

Kaplan,R.B., Cantor, S., Hagstrom, C., Kamhi-Stein, L.D., Shiotani, Y.,& Zimmerman, C.B. (1994). On abstract writing. *Text, 14*, 401-426.

Kaplan, R. (1966). Cultural thought patterns intercultural education. *Language Learning 16*, 1–20.

Kennedy, C. (1991). Systemic grammar and its use in literary analysis. In R. Carter (Ed.) *Language and literature: An introductory reader in stylistics* (pp. 82–99). London: Routledge.

Lores, R. (2004). On RA abstracts: from rhetorical structure to thematic organization. English for specific purposes, 23, 280-302.

Martin, M. P. (2003). A genre analysis of English and Spanish research paper abstracts in experimental social sciences. *English for Specific Purposes, 22,* 25-43.

Martinez, I. A. (2001). Impersonality in the research article as revealed by analysis of the transitivity structure. *English for Specific Purposes*, 20, 227-247.

Salager-Mayer, F. (1990). Discoursal flaws in medical English abstracts: a genre analysis per research and text type. *Text, 10 (4),* 365-384

Samraj, B. (2005). An exploration of a genre set: research article abstracts and introductions in two disciplines. *English for Specific Purposes, 24(2),* 141–156.

Shi., L (2002). How western-trained Chinese TESOL professional publish in their home environment. *TESOL Quarterly, 36* (4), 625–634.

Simpson, P. (1993). *Language, ideology and point of view*. London: Routledge.

Stubbs, M. (1996). *Text and corpus analysis*. Oxford: Blackwell.

Swales, J. (1981). *Aspects of article introductions*. Birmingham: The University of Aston, Language Studies Unit.

Swales, J.M. (1990). *Genre analysis: English in academic and research settings*. Cambridge: Cambridge University Press.

Swales, J.& Feak, C. (1994). *Academic writing for graduate students: essential tasks and skills.* USA: University of Michigan Press.

Weissberg, R. & Buker, S. (1990). *Writing up research: Experimental research report writing for students of English*. Englewood, NJ: Prentice Hall.

Yu, L. and Liang, Y. G. (2006). Study on writing model of English research article abstracts in science and technology. *Foreign Language Teaching, 10,* 29 - 34.

Zhang, Y. and Zu, D Q. (2006). Evaluation: TC Schemata in the English and Chinese financial research article abstracts. *Foreign Language Teaching, 2,* 27-30.

The Linguistics Journal

The Generic Structure and Discourse Strategies Employed in Downward Request E-mails

Victor Ho
Macquarie University, Australia

Biodata

Victor Chung-kwong Ho has been a lecturer at the Language Centre of Hong Kong Baptist University and is now working as Research Associate at the university whilst undertaking his Ph.D. studies in linguistics from Macquarie University.

Abstract

This paper aims to investigate the generic structure and discourse strategies employed by the leaders of a multi-cultural group of educators in making downward requests through internal e-mails. The request e-mails used in the study were addressed to either the Chinese or non-Chinese members of the group. Bhatia's (2004) multi-perspective model of genre analysis is drawn upon to reveal the following features of the e-mails: (1) generic structures, (2) intertextuality, and (3) lexico-grammar. Different generic structures and discourse strategies were found in the e-mails. An attempt has been made to explain such generic and discoursal differences in terms of the cultural background of the e-mail users (both senders and recipients) and the rank of imposition of the requested acts.

Key words: request, genre, intertextuality, lexico-grammar

1. Introduction

E-mail as a means of communication has received considerable attention in the past two decades (Gains 1999, Gimenez 2006, Murray 1995, Sproull & Kiesler 1986). Various aspects of e-mail communication have been studied, such as its generic structure (Murray 1991; Yates & Orlikowski 1992), its language (Ferrara & Whittemore 1991, Sproull & Kiesler 1986), and its advantages to users (Caron 2000). Nickerson (2000) studies the use of e-mail – its generic structure and linguistic properties – by employees of a multinational corporation and finds that they rely on e-mail to a great extent for the exchange of information, and organization and execution of corporate activities. Apart from the business sector, e-mail has emerged as one of the most commonly used channels of

communication among English language teachers, in view of its advantages such as empowering teachers' collaborative and networking efforts (Boshier, 1990; Caron, 2000; Rodes et al., 2000), diminishing the teachers' feeling of isolation, and elevating the interactions among teachers (Tannehill et al., 1995; Levin & Thurston, 1996).

The genre of e-mail has been studied previously by, for example, Gains (1999) and the present study examines a sub-genre of e-mail in particular – request e-mail. Gains's (1999) study focuses mainly on the textual aspects of the e-mail genre. Topics like the openings and closings, conversational features, and abbreviation and word omission were studied. Other important features such as the rhetorical move structure and discourse strategies were not examined. To have a more thorough understanding of the sub-genre of request e-mail, Bhatia's (2004) multi-perspective model of genre analysis is drawn upon in the present study. The request e-mails of the present study met two criteria: (1) they were sent by the two Heads of English Department to their subordinates, and (2) they contained at least one request and thus served the purpose of requesting the recipient(s) to perform certain act. Through the study, I hope to reveal (1) the generic structure of the request e-mails, (2) the discourse strategies the leaders (senders) of the multi-cultural group of educators chose to accompany the requests, and (3) the lexico-grammar of the e-mails. In the rest of this paper, the research site, data collection (e-mails collected and examined in the study) and methodology will first be described in the next section, followed by a discussion of the three features outlined above.

2. Research site, data collection and analytical framework

2.1. The subjects – e-mail senders and recipients

The English Department of a public education institute in Hong Kong, of which I was a member during the data collection period (1 September 2003 – 31 August 2005), is the research site of the present study. The site is therefore a bureaucratic educational institution with a clear hierarchical structure. The leaders of the department were the two Heads of Department, who were English teachers themselves occupying a higher substantive rank than the rest of the department. The subordinates consisted of seven Hong Kong Chinese, one British, and one Australian. The Chinese were brought up in Hong Kong and had resided in Hong Kong for more than 25 years. The two non-Chinese had only stayed in Hong Kong for about a year. The subordinates were required to report to the two leaders who would assess their performance throughout the year and would write up an appraisal report for each of them. The report would finally reach the head of the institute and then to the Education Bureau (EDB) of the Hong Kong Special Administrative Region Government. The leaders, besides reporting on their subordinates' performance, were mainly responsible for leading the

department in implementing the school's or the EDB's policies concerning English language teaching and learning.

2.2. The emergence of e-mail as means of communication among members

Since August 2003, the teachers were allocated to four different offices (two on the ground floor, one on the playground, and one on the second floor). Before that there were only two adjacent offices, so they were a lot closer to one another before August 2003. It made the otherwise easy and frequent face-to-face interaction difficult and rare. This was further aggravated by the full teaching schedule of the teachers (at least 20 hours per week) and their various after-class commitments (both teaching and administrative). Teachers, including non-English teachers, had complained about the situation to the head of the institute requesting the administration to take necessary measures to restore close and frequent teacher contact and collaboration. However, until the end of the data collection period, the issue still had not yet been fully resolved. To enable teachers to be in close contact with one another, enhance collaborative lesson preparation, and increase administrative efficiency under these circumstances, the English Department set up an e-group for its members in September 2003. Members could then communicate with any one or any number of members of the department through e-mails. The e-mails sent through the e-group served a variety of purposes ranging from organizing a social gathering to distributing a formal meeting agenda. The e-mails selected for the present study were those sent by the leaders to their subordinates requesting them to perform a certain act.

2.3. Data collection

With the consent of the teachers involved and the head of the institute, the request e-mails which were sent during the period of 1 September 2003 to 31 August 2005 were first collected by copying them into a Word document. For confidentiality and privacy purposes, the real names of the teachers and students were replaced with pseudo ones. They were then divided into two groups – those addressed to Chinese subordinates (CS) and those to non-Chinese subordinates (NCS). Both groups of e-mails contained requests which require the recipients to perform various acts including those within and outside the scope of their duties. Each of the teachers, being a government servant, had been assigned well-defined duties which were presented in a duty list as decided by the head of the institute and the two Heads of Department. Requested acts that were within their scope of duties are referred to as 'low-imposition' requests and those outside as 'high-imposition' requests. A total of 37 request e-mails were sent to the seven CS and 10 were sent to the two NCS. An average of approximately 5.2 request e-mails were sent to each of the subordinates (47 request e-mails addressed to nine subordinates).

2.4. The analytical framework

By drawing on Bhatia's (2004) multi-perspective model of genre analysis, each group of e-mails was then analyzed to reveal the: (1) generic moves structure (Swales 1990, Bhatia 1993), (2) discourse strategies – intertextuality (Fairclough 1992), and (3) lexico-grammar (Halliday 1994). This model of genre analysis treats discourse as 'text, genre, professional practice, and social practice' (Bhatia 2004: 19), which corresponds to respectively the 'textual space', 'tactical space', 'professional space', and 'social space' (ibid). The emphasis in the textual space is 'on the properties associated with the construction of the textual product' (Bhatia 2004: 20), which include such features as lexico-grammar, semantics, and rhetorical move structures. The tactical space concerns how established members of discourse communities exploit generic resources in their everyday operation. The professional space extends the tactical space to the professional practice in which one is engaged. The last one, social space emphasizes the effect of social context on the production and interpretation of discourse. The present study approaches the request e-mail discourse by looking at it within these four spaces. I will approach the request e-mail discourse as text by analyzing their 'surface-level properties' (Bhatia 2004: 19) including rhetorical move structure, lexico-grammar and intertextuality. I will then take the analysis further examining the social space by relating the observed rhetorical move structure, lexico-grammar and intertextuality to the wider social and cultural context. It is hoped that deeper understanding of the construction and use of the request e-mails by the professional educators, the textual features of the e-mails, and the effect of the wider social and cultural contexts on the request e-mail discourse can be achieved through this study.

3. Generic structure of request e-mail

3.1. Request e-mail discourse as a sub-genre

Genre, according to Swales (1990: 58), 'comprises a class of communicative events, the members of which share some set of communicative purposes'. And the communicative purpose is regarded as the 'privileged property of a genre' (ibid: 52). That is, the classification of texts into various genres is basically determined by their communicative purpose. E-mail, which serves various such purposes as requesting for and providing information, and influencing others (Sherblom 1988; Ziv 1996), is therefore regarded as a genre (Nickerson 2000; Gimenez 2006). The main communicative purpose of the e-mails examined in the present study is requesting for either information or action, and for this reason I put this corpus of e-mails under the sub-genre of request e-mails. In the rest of this section, the textual space (the rhetorical move structures) of the e-mails will first be discussed, followed by an account of the relation between the move structures and the wider social and cultural context.

3.2. Move structures

As discussed in Section 2.4. above, rhetorical move structure is one of the elements to be examined in the textual space of Bhatia's (2004) multi-perspective model of discourse analysis. The moves present in the request e-mails are identified the communicative or rhetorical functions they perform. A total of six moves performing different rhetorical functions are identified and listed in Table 1 below:

Table 1: Generic move structure of the request e-mails

Moves	**Extracts from the e-mail corpus**	**Presence (%)**	
		CS	**NCS**
1 Acknowledging the recipient's contribution	a. Thanks for your prompt action b. Teacher 1, thanks for arranging the briefing session.	32%	60%
2 Providing background information (underlined)	<u>There're 5 girls in Class X doing the Activity A and a boy in class Y doing the activity. … Since they're so eager to do it, I'll coach them. Don't want to disappoint them that much. I don't mind working hard for those who are willing to work hard</u>. Do you have the poems tomorrow?	73%	90%
3 Making the request	a. Do you have the poems tomorrow? b. Shall we meet again tomorrow after school?	100%	100%
4 Convincing the recipient to comply (underlined)	Teacher 1, thanks for arranging the briefing session. Please also extend our thanks to Mr. X. <u>I know it's nothing easy to do that. (You know well what students you're having.) Great courage to take up the challenge.</u>	80%	90%
5 Elaborating the request (underlined)	Why don't we conduct the competition on a level basis, <u>i.e. S.1 students will compete with S.1 students, and S2 students compete with S2 students</u>?	24%	20%
6 Ending the e-mail (underlined)	Teacher 1, if possible, can you put them in nice tables for me? … I can't handle figures and charts myself. <u>Thanks! Wish everyone a splendid holiday!</u>	60%	40%

CS – Chinese subordinates NCS – Non-Chinese subordinates

Move 1, if present (CS – 32%, NCS – 60%), was always the first move in the body of the e-mail after the salutation. In this move, the sender acknowledged the recipient's contribution by, for example, mentioning the work done briefly or showing appreciation for the effort made. Move 2, which usually followed Move 1 if present (CS – 73%, NCS – 90%), served to provide the recipients with some information relevant to the request so as to help them make better sense of it. Using Mann et al.'s (1992: 71) definition of 'Background' as a reference, this move serves to increase the recipients' ability to comprehend the request. Move 3 carries and conveys the purpose of the e-mail and is therefore obligatory. When present Move 4 (CS – 80%, NCS – 90%), contrary to the other moves which usually occupied a relatively stable and predictable position in the overall structure of the e-mail, did swap with Move 3, depending on the cultural background of the recipients and the rank of imposition of the requested action in Move 3. I will discuss this move and its position in the e-mail structure in greater detail in Sub-section 3.3 below. Move 5 (CS – 24%, NCS – 20%), which came after Move 3 or Move 4, provided further information about the requested action to the recipients. Move 6 (CS – 60%, NCS – 40%) served to bring the e-mail to the end.

Extract 1 below shows an e-mail consisting of five of the six moves (No one single e-mail in the corpus was found to comprise all the six moves) –

Extract 1

Move 1 – acknowledging the recipients' work	Thanks for all the work you've done for the exhibition.
Move 3 – making the 1st request	Also, please express my gratitude to the boys and girls who have helped with the preparation work and the 'labor work'.
Move 5 – elaborating the request	In our school, anything can happen. Thus, we have to assume as many roles as we can.
Move 3 – making the 2nd request	Let's continue with this kind of sharing.
Move 4 – convincing the recipients	I'm sure some of the students will be motivated to work better and put greater effort in their work.
Move 6 – ending the e-mail	Thanks again for all your hard work.

3.3. The effect of cultural background and rank of imposition of requested act

As noted above, Move 4 did not occupy a fixed position in the overall structure of the e-mail. On the other hand, it sometimes swapped its position with Move 3. Such difference could be attributed to the combined effect of two factors: (1) the cultural background of the recipients, and (2) the rank of imposition of the requested act in Move 3. The leaders of the group tended to present the request before they convinced the recipients to comply with various 'supportive moves' (Blum-Kulka 1989: 287) –

reasons, justifications or explanations – when they make both high- and low-imposition requests of NCS. Such a way of presenting the main topic (the request) before the introduction of the details which lead to such topic is termed the deductive pattern of discourse (Scollon & Scollon 2001: 75). The leaders, however, showed an obvious preference for the inductive pattern of discourse (ibid) – putting the details leading to the main topic (the request) before it is introduced – in making high-imposition requests of CS – 75% of such requests was preceded by at least one instance of Move 4.

The two extracts below illustrate how the leaders used the deductive rhetorical approach (Extract 2) and inductive rhetorical approach (Extract 3) in their request e-mails –

Extract 2

Move 1	Teacher 1, thanks for arranging the briefing session.
Move 3	Please also extend our thanks to Mr. X.
Move 4a	I know it's nothing easy to do that (You know well what students you're having).
Move 4b	Great courage to take up the challenge.

The leaders used two instances of Move 4 in this request e-mail. In Move 4a, the leader explained to the recipient why the request was necessary. This supportive move was employed to convince Teacher 1, the e-mail recipient, to thank Mr. X. It was then followed by Move 4b, which made the recipient feel good about herself.

Extract 3

Move 1	You all have done a marvelous job, making the exhibition possible. I'm sure when the students see their work on display, they'll be thrilled and become more motivated to future work. They'll try to work better.
Move 4a	I told my Class X this morning about Activity A. They seemed quite eager to do it but I can't guarantee if they hand

	in any work on the deadline. You know their eagerness always lasts for only 5 minutes. Anyway, I'm glad that they at least show some zeal in it. Also, I'm surprised to see that they're willing to be the ambassadors even after I told them they have to speak in English. Some even asked why they were not chosen. Isn't that amazing?
Move 4b	Their responses give me hope. They tell us that if we show them the various ways they can learn the language, they'll be more prepared to learn it and more eager to try.
Move 3	Let's put our heads together and think of more ways to 'attract' them to our world.
Move 6	Let's hope that the Exhibition will run smoothly tomorrow.

In the above extract, the leader once again used two instances of Move 4 (4a and 4b) in convincing the recipients to comply with the request in Move 3. The first one, Move 4a, served to convince the recipients by arousing their emotions to gain compliance for a request. The class that the leader mentioned in her request e-mail was one with little motivation to learn and improve. The majority of the students did not make any effort in classroom learning or participating in any school's learning activities. Their desire to be the ambassadors of the activity and their willingness to try to speak in English as reported in the e-mail as 'I'm surprised to see that they're willing to be the ambassadors even after I told them they have to speak in English' could probably arouse the emotions of the recipients and act as requested as a result. The second one, Move 4b, explained to the recipients the advantages for them to perform the requested act – to work out ways collaboratively to get the students to learn more (Move 3).

Such a differential choice of rhetorical strategy is supported by Zhang's (1995) notion of Chinese indirectness which concerns the amount of supportive moves preceding a request – placing the request after the supportive moves could be an indication of the Chinese leaders showing indirectness to their Chinese subordinates. Another reason for the leaders to use an inductive strategy could be, as Scollon & Scollon (2001: 91) put it, attributable to the fact that the leaders wanted to 'show that he or she does not wish to impose on the other participants'. This would then help to soften the force of imposition exerted on the recipients, and signal to them that the leader was not 'assuming that his or her listener will automatically agree with his or her opinion' (ibid).

4. Intertextuality

Analyzing the role of intertextuality is within the textual perspective of genre analysis (Bhatia, 2004). In this section, the way the leaders used 'manifest intertextuality' (Fairclough 1992: 104) in phrasing

their request e-mails is discussed. The relation between the use of intertextuality and the wider social and cultural contexts will then be discussed at the end of this section.

There are two kinds of intertextuality (Fairclough 1992: 104): 'manifest intertextuality' and 'constitutive intertextuality'. Manifest intertextuality has been used extensively by the leaders in convincing the e-mail recipients to comply with the requests they made via e-mails. Manifest intertextuality refers to the situation in which 'other texts are explicitly present in the text under analysis' (ibid). These other texts may be cued explicitly by such features as quotation marks, or implicitly without such features. The extracts and discussion below illustrate the use of such strategy in a few cases (Extracts 4 to 6 were for CS and Extracts 7 and 8 were for NCS) –

Extract 4

> The man from Company 1 promised to send our stuff to school at around 10:40 a.m. on Monday. So, shall we decide whether or not to buy the files at his shop as well? If so, we can also ask him to deliver them to our school.

The first sentence is an 'indirect discourse representation' (Fairclough 1992: 107), that is, the words 'the man from Company 1' had actually said, is here reproduced by the e-mail author who might or might not have used 'words of the original' (Fairclough 1992: 119). The discourse produced by 'the man from Company 1' was represented by the leader's own discourse. The leader said that the man had promised to send the stuff to them at a certain time. The force of the locution – promised – worked to the effect that the man was committed to his work and was willing to make such commitment. This helped to depict a picture of a trustworthy owner of the shop. While it was possible that the owner of the shop had indeed uttered the word 'promised', the actual word that he had used could well not be 'promised' but 'agreed', 'said he would', 'said he had no problem' and the like, none of which would have the same effect as 'promised'. The indirect discourse representation using the speech act verb of 'promised' served to persuade the recipients to agree to place order for the files with the same shop by "imposing an interpretation upon the represented discourse" (Fairclough 1992: 120). Since the purchase was made at the beginning of the school semester, which was the busiest time of the school year, choosing to buy the files from the same supplier was desirable since it would save them much time for they would not need to shop around for both price and quality.

Extract 5

> Mr X has just informed me to submit the application forms to him no later than tomorrow after school. What about the others? So far, I've got the names from Teacher 1, Teacher 2, Teacher 3 and Teacher 4.

The voice of someone with power (Mr. X was the teacher overseeing the extra-curricular activities of the school) was represented indirectly here. The leader could have phrased the same sentence as 'we will need to submit the application forms to the school or Mr. X no later than tomorrow after school', or omit the whole sentence altogether before making the request. However, such an intertextual element was used by the leader in order to solicit help from a powerful source so that the leader could more effectively get the recipients to comply with the request which came after the indirectly represented discourse: '*What about the others?*'. This use was deemed necessary by the leader since, from what follows immediately this indirect representation in the extract, only four members had complied with her earlier request. The others, six in total, had not responded at all long after the first request. The leader was trying to effect request compliance with this particular instance of intertextuality.

Extract 6

> Organization 1 called and asked about our using the 'English in the media'… They also want to introduce how we can make the best use of their English Campus which actually includes a lot of helpful resources and materials, like those for the reading purposes or phonics. …. So, please come and join us.

The voice of the authoritative IT education resource body in HK ('Organization 1' at the very beginning of the extract) was represented indirectly on top of the leader's. This helped to establish the credential of the forthcoming event, and to highlight the benefits for the staff of joining the event. The use of the intensifiers 'best', 'a lot of' and the adjective 'helpful' in the indirectly represented discourse, whether they had been the words used by the 'organization' or not, further contributed to the above effect: establishing the event's credential and highlighting the importance of joining the event.

The above three extracts show how manifest intertextuality was used in helping to achieve request compliance from CS. The next two extracts show how it was used in the NCS e-mails.

Extract 7

> Besides, I was once asked to participate in another activity called Activity X. This time, instead of merely e-mails, students exchange letters and other things that represent their countries and culture.

This was a request itself demonstrating 'nonconventional indirectness' (Blum-Kulka 1989: 45) – one whose speaker meaning is ambiguous, may have multiple meaning, and is usually non-specific. The voice of another discourse, which was not specified, was indirectly represented using a passive

construction. This unspecified source of voice added to the effect of the nonconventional indirectness – to save the face of both the leader and the recipients. It was the idea of someone else's instead of the leader's. The refusal to comply wouldn't damage her face as much as if the request had been phrased in a more direct way in the leader's own voice. The added ambiguity of the request further gave the recipients space in their interpretation of the utterance as a request or some other speech act. A nonconventionally indirect request was made instead of a less indirect one since the action requested – organizing an activity involving a large number of both local and overseas students involved tremendous amount of work. The act requested was also not a duty the recipient was supposed to perform. It was therefore a request of high imposition.

Extract 8

> As Mr. Y said S1 and S2 classes will be doing the Choral Speaking…Teacher 1, do you think you can give your dearest colleagues a hand?

An indirect discourse representation was used in this instance of intertextuality. The leader used the voice of another member of the Department (named Mr. Y) to first inform the members of the Department of the Choral Speaking activity for S1 and S2, and second to provide the background information for the recipient of the request.

The three CS e-mail extracts appear to be different from the two NCS e-mail extracts in one aspect. The CS e-mail extracts show a common feature present in the instances of intertextuality employed by the leaders – the source of the indirectly represented discourse was either themselves vested with credentials (Mr. X in Extract 5 and Organization 1 in Extract 6) or made to be so (the man from Company 1 in Extract 4). On the other hand, the two NCS e-mail extracts do not see such a feature. Instead of drawing the recipients' attention to the indirectly represented sources, the leaders only mentioned the source indirectly (Extract 7) or directly without any qualification (Extract 8).

Such a differential choice of strategies in using intertextuality might be attributed to the Chinese Confucius belief which puts strong emphasis on the hierarchy of society (Cheng & Chung 1994; Yum 1988). While requesting the CS, the Chinese leaders could consolidate the existing hierarchical power difference by drawing support from trustworthy, powerful, and authoritative figures. However, when the recipients were NCS, who have a Western cultural background which is associated with the Utilitarian Discourse System (Scollon & Scollon, 2001), the leaders did not refer to such a power difference. This could be due to the fact that in the Utilitarian discourse system, 'individuals must be considered to be equal to each other' (Scollon & Scollon, 2001: 110).

Lexico-grammar

Similar to the two preceding sections, the textual features of the e-mails at clause level – lexico-grammar in this case – are first discussed followed by a description of how such features are related to the wider social and cultural context in this section. I will first discuss briefly the 'experiential metafunction' (Halliday & Matthiessen, 2004: 61) of language, with the focus being the types of process and their respective participants below.

Systemic functional grammar has been used extensively in previous research (e.g. Huang, 2002; Leong, 2005; Melrose, 2005; Muntigl, 2002). It is also one of the main analytical frameworks that Critical Discourse Analysis (Fairclough, 1992) draws upon. According to this grammar, language performs different metafunctions including the 'ideational metafunction' which consists of the 'experiential and 'logical metafunction', the 'interpersonal metafunction', and the 'textual metafunction' (Halliday & Matthiessen, 2004: 61). The experiential metafunction concerns that language is used to represent 'patterns of experience' in such a way that it enables humans to 'build a mental picture of reality' and to 'make sense of what goes on around them and inside them' (ibid). To perform such function, the clauses of language are interpreted as representing an individual's experience of the real world (Halliday & Matthiessen, 2004). It does so mainly through its transitivity system which treats clauses as different kinds of processes with different participants (Halliday & Matthiessen 2004: 170–175): (1) Material Process (Actor, Goal): it represents the 'outer experience' which includes the experience of actions and events; (2) Mental Process (Sensor, Phenomenon): it represents the 'inner experience' which refers to the process of consciousness; (3) Relational Process (e.g. Carrier, Attribute, Identified, Identifying, Possessor, Possessed): it functions to relate fragments of experience with one another; (4) Verbal Process (Sayer, Verbiage): it refers to the 'symbolic relationships constructed in human consciousness and enacted in the form of language'; (5) Behavioral Process (Behaver, Manner): it represents 'outer manifestations of inner workings, the acting out of processes of consciousness and physiological states'; and (6) Existential Process (Existent): it is concerned with existence.

The Processes and Participants of the clauses the leaders used in the e-mails were identified and put under one of the six Processes and their corresponding Participants. One interesting phenomenon was observed – the leaders' choice of the Participant terms for students was different for CS and NCS. The leaders used 'kids / boys and girls' and 'students', the two terms which referred to the same entity, differentially. Material Processes were used most frequently in the clauses in which these two

alternative terms were coined as Participants. The two sub-sections below discuss first the leaders' structural choice and then lexical choice.

5.1. Structural choice

Clauses having either 'kids / boys and girls' or 'students' as Participant were further analyzed to reveal their type of Process. A total of 31 such clauses were found – 20 of them were used in the e-mails addressed to the CS, and 11 addressed to the NCS. It was found that four types of Process had been used with these Participant terms: Material, Mental, Relational, and Existential. Table 2 below shows the structural choice of the leaders realized as various Processes.

Table 2: Leaders' structural choice -- Processes

		CS		NCS	
		Students	Kids / boys and girls	Students	Kids / boys and girls
Processes	Material	9 (82%)	9 (100%)	3 (43%)	3 (75%)
	Mental	1 (9%)	--	2 (29%)	1 (25%)
	Relational	1 (9%)	--	1 (14%)	--
	Existential	--	--	1 (14%)	--

5.1.1. When the recipients were CS

Material Processes were used in all the clauses where 'kids / boys and girls' was used as Participants; whereas when 'students' was used as Participants, 82% of the clauses used the same Process, and the others used either the Mental Process or Relational Process.

5.1.2. When the recipients were NCS

Again, the Material Process was the most preferred process: 75% and 43% of the clauses used the process when 'kids / boys and girls' and 'students' were chosen as Participants respectively. The Mental Process was also used in both cases: 25% for 'kids / boys and girls' and 29% for 'students'. The Relational Process and Existential Process were only used when 'students' was chosen as Participants.

Extracts 9 to 12 below show the various Processes used to represent the e-mail writers' experience –

Extract 9

> Also, please express my gratitude to the boys and girls who have helped with the preparation work and the ‘labor’ work.

Actor: the recipient, presupposed

Process: Material, ‘express’

Goal: ‘my gratitude’

Beneficiary: ‘the boys and girls who have helped with the preparation work and the ‘labor’ work’

Extract 10

> Besides, I believe both junior and senior students will find your suggested website appealing.

Sensor: ‘junior and senior students’

Process: Mental, ‘find’

Phenomenon: ‘your suggested website’

Range: ‘appealing’

Extract 11

> It’s great to know you have already got such a big group of students from your country and are ready to start this program.

Possessor: ‘you’

Process: Relational, ‘have already got’

Possessed: ‘students’

Extract 12

> Viene, how many students are there in your old form class?

Process: Existential, ‘are there’

Existent: Entity, ‘students’

While it was revealed that the Material Process was the most preferred process representing the experiential dimension when the two possible Participants were used, it is still not clear what factor(s) made the e-mail writer choose differentially between 'kids / boys and girls' and 'students'. The following sub-section on lexical choices should be able to reveal other factors.

5.2. Lexical choices

The category of Participants – 'kids / boys and girls' and 'students' were further analyzed to classify them into different Participant roles – Actor, Goal, Beneficiary, Circumstantial, Sensor, Phenomenon, Possessed, and Existent. Table 3 below shows the leaders' lexical choice realized as Participants in the e-mail corpus.

Table 3: Leaders' lexical choice -- Participants

		CS		NCS	
		Students	Kids / boys and girls	Students	Kids / boys and girls
Participants	Actor	2 (18%)	1 (11%)	--	1 (25%)
	Goal	4 (36%)	2 (22%)	1 (14%)	1 (25%)
	Beneficiary	--	6 (67%)	--	1 (25%)
	Circumstantial	3 (27%)	--	2 (28%)	--
	Sensor	1 (9%)	--	1 (14%)	1 (25%)
	Phenomenon	--	--	1 (14%)	--
	Possessed	1 (9%)	--	1 (14%)	--
	Existent	--	--	1 (14%)	--

The leaders used 'students' generally more frequently than 'kids / boys and girls': they used 11 instances (55%) of 'students' and nine instances (45%) of 'kids / boys and girls' in the CS e-mails; and seven instances (64%) of 'students' and four instances (36%) of 'kids / boys and girls' in the NCS e-mails.

5.2.1. When the recipients were CS

The leaders showed a clear preference for 'kids / boys and girls' as the Participants when it was the Beneficiary, that is, when it was the recipient of the goods or services that the Process brought to them. On the contrary, the 'students' had not been chosen to be the Beneficiary. The 'students' was used mainly as the Goal, Circumstantial elements, or Actor.

Extract 13 below shows the case when ‘kids’ was made the Participant (Beneficiary), and Extract 14 shows the case when ‘students’ was made the Participant (Circumstantial elements) –

Extract 13

> We can simply move four tables (2 for teachers and 2 for S.6 kids) to the middle, make sure spectators can gather around the tables.

Actor: ‘We’

Process: Material ‘move’

Goal: ‘four tables’

Beneficiary: ‘teachers, kids’

Extract 14

> …it might be a good speaking exercise for S6 students.

Carrier: ‘it’

Process: Relational, ‘be’

Attribute: ‘a good speaking exercise’

Circumstantial elements: ‘for S6 students’

5.2.2. When the recipients were NCS

In assigning Participant roles to ‘kids / boys and girls’, the leaders showed equal preference for Actor, Goal, Beneficiary, and Sensor. A slightly stronger preference was given to Circumstantial elements when the ‘students’ was used. The other Participant roles including Goal, Sensor, Phenomenon, Possessed, and Existent received the same preference from the leaders.

The lexical choice of the leaders in relation to the Participant terms ‘kids / boys and girls’ and ‘students’ revealed that when the Participant role was Beneficiary, ‘kids / boys and girls’ was favored in the CS corpus. The word ‘kids’, according to Collins Cobuild English Language Dictionary (1987), is used informally to refer to young children, or to people younger than the speaker (who is

going to tell them something or give them advice). The e-mail writers were then placing themselves and the recipients (CS) in the position to give the students advice. This then made sense for them to put 'kids / boy and girls' in the Beneficiary since such a Participant role is one to whom 'goods are given' or for whom 'services are done' (Halliday, 1994: 145). This is also in line with the Confucius belief in which teachers have a higher social status than students (Cheng & Chung, 1994; Yum, 1988) and are therefore expected to give advice (e.g. in the form of passing knowledge to students). The choice of Participant terms – 'kids / boys and girls' or 'students' – as revealed in the analysis of the present e-mail corpus shows that the leaders, having a Chinese cultural background themselves, demonstrated differences in one aspect when addressing recipients of Chinese and non-Chinese cultural background: they preferred strongly 'kids / boys and girls' when such term was made the Beneficiary when addressing Chinese subordinates.

Such a culture-oriented differential choice of Participant terms is further supported by the fact that when the recipients were NCS, Beneficiary only received the same preference as the other three Participants: Actor, Goal, and Sensor. These other Participants did not receive any goods or services directly or indirectly in the Process.

Another factor which might have caused the difference in lexical choice could be the rank of imposition of the requested act. Among the 13 instances of the use of 'kids / boys and girls', 12 (92%) of them were associated with a low-imposition request; whereas among the 18 instances of the use of 'students', only 11 (61%) of them were associated with a low-imposition request. In other words, the e-mail writers showed a stronger tendency to use the informal term 'kids / boys and girls' than 'students' as the Participants for low-imposition requests (92% vs. 61%). As the rank of imposition increased, the e-mail writers showed an increasing tendency to use the neutral, more formal Participant term 'students' for high-imposition requests: only 8% of high-imposition requests saw the use of 'kids / boys and girls', and as many as 39% of such requests saw the use of 'students'.

6. Limitations of the study

The size of the e-mail corpus used in this study was not large enough to make any representative generalizations possible. There were only 47 request e-mails in the corpus, and the number of teacher members of a non-Chinese cultural background (i.e. NCS) was just approximately one-third of those of a Chinese cultural background (i.e. CS). The number of e-mails addressed to these two groups of subordinates differed by a large extent as a result (37 for CS, 10 for NCS). Therefore, the findings obtained and the conclusions to be drawn from this study serve only as an initial reference for further

research on a similar topic but with a larger corpus of e-mails addressed to a larger number of both CS and NCS.

7. Conclusion

E-mail has been established as one of the main channels of communication among the multi-cultural group of teachers of the education institute in this study. The Chinese leaders of the group made requests of both the Chinese and non-Chinese group members via e-mail in a number of different ways. First, while a total of six moves were identified in the request e-mails, the order of these moves varied as a result of the combined effect of the cultural background of the recipients and the rank of imposition of the requested act. The leaders showed a stronger tendency to use the inductive rhetorical approach while making a high-imposition request of the Chinese members – convincing the recipients to comply with various tactics (Move 4) before making the request (Move 3); whereas the reverse order was observed when the recipients were non-Chinese members. It has been argued in this paper that the difference could be attributed to: (1) the way of showing indirectness by Chinese, and (2) the leaders' unwillingness to impose on the recipients (Scollon & Scollon 2001). Second, the intertextual elements in the CS e-mails were indirectly represented discourse of people with power such as Mr. X – the teacher overseeing the extra-curricular activities of the school; whereas those in the NCS e-mails were indirectly represented discourse of people of equal status. In other words, they consolidated the hierarchical power difference in the CS e-mails, but conformed to the Utilitarian Discourse System in their interaction with NCS – the power difference between the leaders and the NCS was not put into play. Third, while the Material Process was the main process used by the leaders in addressing both the CS and NCS, the choice of Participant terms differed as the recipients, Participant role, and the rank of imposition of the requested act varied. In the CS e-mails, 'kids / boys and girls' was preferred to 'students', and such a preference became even stronger when the Participant role was Beneficiary, that is, when 'kids / boys and girls' was made the object who was to receive either goods (Beneficiary–Recipient) or services (Beneficiary–Client). The Confucius belief concerning the maintenance of the hierarchical power difference by both the senders and recipients may be the reason for such Participant role assignment. The same preference – an informal term – was also observed in low-imposition requests.

References

Akar, D., & Louhiala-Salminen, L. (1999). Towards a new genre: A comparative study of business faxes. In F. Bargiela-Chiappini & C. Nickerson (Eds.), *Writing business: Genres, media and discourses* (pp. 207–226). London and New York: Longman.

Bazerman, C. (1994). Systems of genres ad the enactment of social intentions. In A. Freedman & P. Medway (Eds.), *Genre and the new rhetoric* (pp. 79–101). London: Taylor and Francis.

Bhatia, V. K. (1993). *Analyzing genre: Language use in professional settings*. London: Longman.

Bhatia, V. K. (2004). *Worlds of written discourse*. New York: Continuum.

Blum-Kulka, S. (1989). Playing it safe: The role of conventionality in indirectness. In S. Blum-Kulka, J. House, & G. Kasper (Eds.), *Cross-cultural pragmatics: Requests and apologies* (pp. 37–70). New York: Ablex.

Boshier, R. (1990). Socio-psychological factors in electronic networking. *International Journal of Lifelong Education 9*(1), 49–64.

Caron, J. (2000). *Virtual insights: The design, development and evaluation of a strategy for online communication in teacher professional development.* Unpublished Master's dissertation, Concordia University, Canada.

Chen, G.-m. and Chung, J. (1994). The impact of Confucianism on organizational communication. *Communication Quarterly 41*, 93–105.

Collins Cobuild English language dictionary (1987). The University of Birmingham. Birmingham, UK: Collins.

Fairclough, N. (1992). *Discourse and social change*. Cambridge, MA: Polity Press.

Ferrara, H., & Whittemore, G. (1991). Interactive written discourse as an emergent register. *Written Communication 8*(1), 8–34.

Gains, J. (1999). Electronic mail: A new style of communication or just a new medium? An investigation into the text features of e-mail. *English for Specific Purposes 18*(1), 81–101.

Gimenez, J. (2006). Embeded business e-mails: Meeting new demands in international business communication. *English for Specific Purposes 25*(2), 154–172.

Halliday, M. A. K. (1994). *An introduction to Functional Grammar* (2nd ed.). London: E. Arnold.

Herring, S. C. (1996). Two variants of an electronic message schema. In S. C. Herring (Ed.), *Computer-mediated communication: Linguistic, social and cross-cultural perspectives* (pp. 81–108). Amsterdam: John Benjamins.

Levin, J., & Thurston, C. (1996). Research summary: educational electronic networks. *Educational Leadership 54*(3), 46–50.

Mann, W., Matthiessen, C., & Thompson, S. (1992). Rhetorical Structure Theory and text analysis. In W. Mann & S. Thompson (Eds.), *Discourse description: Diverse linguistic analyses of a fund-raising text* (pp. 39–78). Amsterdam and Philadelphia: John Benjamins.

Mulholland, J. (1999). E-mail: Uses, issues and problems in an institutional setting. In F. Bargiela-Chiappini & C. Nickerson (Eds.), *Writing business: Genres, media and discourses* (pp. 207–226). London and New York: Longman.

Murray, D. (1991). The composing process for computer conversation. *Written Communication 8*(1), 35–55.

Murray, D. (1995). *Knowledge machines: Language and information in a technological society*. New York: Longman.

Nickerson, C. (2000). *Playing the corporate language game: An investigation of the genres and discourse strategies in English used by Dutch writers working in multinational corporations.* Amsterdam and Atlanta: Rodopi.

Rodes, P., Knapczyk, D., Chapman, C., & Haejin, C. (2000). Involving teachers in web-based development. *THE Journal 2710*: 1–8. Retrieved January 12, 2007 from www.thejournal.com/magazine/vault/A2868.cfm.

Scollon, R. & Scollon, S. W. (2001). *Intercultural communication: A discourse approach* (2nd ed.). Oxford: Blackwell.

Sherblom, J. (1988). Direction, function and signature in electronic mail. *The Journal of Business Communication 25*(4), 39–54.

Sproull, L., & Keisler, S. (1986). Reducing social context cues: Electronic mail in organizational communication. *Management Science 32*(11), 1492–1513.

Swales, J. (1990). *Genre analysis: English in academic and research settings*. Cambridge: Cambridge University Press.

Tannehill, D., Berkowitz, R., & LaMaster, K. (1995). Teacher networking through electronic mail. *Journal of Technology and Teacher Education 32*(3), 119–136.

Yates, J., & Orlikowski, W. (1992). Genres of organizational communication: A structurational approach to studying communication and media. *Academy of Management Review 17*(2), 299–326.

Yukl, G. (2006). *Leadership in organization* (6th ed.). Englewood Cliffs, NJ: Prentice Hall, Inc.

Yum, J. O. (1988). The impact of Confucianism on interpersonal relationships and communication patterns in East Asia. *Communication Monographs 55*, 374–388.

Zhang, Y. (1995). Indirectness in Chinese requesting. In G. Kasper (Ed.), *Pragmatics of Chinese as native and target language* (pp. 69–118). Honolulu: Second Language Teaching & Curriculum Center, University of Hawaii at Manoa.

Ziv, O. (1996). Writing to work: How using e-mail can reflect technological and organizational change. In S. Herring (Ed.), *Computer-mediated communication: Linguistic, social and cross-cultural perspectives* (pp. 243–64). Amsterdam and Philadelphia: John Benjamins.

Zucchermaglio, C., & Talamo, A. (2003). The development of a virtual community of practices using electronic mail and communicative genres. *Journal of Business and Technical Communication 17*, 259–284.

The Linguistics Journal

Parametric Variation of the 3RD Person Singular in English and Some Nigerian Languages

Lamidi, M. T.

Department of English,
Faculty of Arts,
University of Ibadan, Nigeria.

Biodata

Dr. Lamidi's areas of interest include the syntax of contact linguistics and contrastive linguistics. He identified the grammatical basis of Yorùbá-English Code-Switching and is currently looking at the phenomenon of code switching in virtual communities. He has also contributed to the codification of the grammatical structure of the Nigerian Variety of English. He has published in books and journals both locally and internationally.

Abstract

The third person singular is unique in English grammar as the only form that differs from the other grammatical persons. Curiously, the same phenomenon of the third person is replicated in a number of Nigerian languages. Working within the minimalist program, the study offers a cross-linguistic exploration of the third person singular effect on subject, object and possessive pronouns in different languages. Based on data analysis of English, Yorùbá, Igbo and Hausa languages, the paper suggests that the uniqueness of the third person singular is possibly a universal trait with differences being peculiar to each language or dialect. In addition, it proposes the inclusion of tone among lexical items selected for computation in the working area.

Keywords: English, Nigerian languages, third person singular effect, tone, features

Introduction

This study is motivated by the observation that within the Spec – head (specifier-head) agreement relation between a subject and an INFL (inflection) in English, the third person singular exhibits morphological features which are absent in the 1st and 2nd person singular forms and the plural forms of all persons as in (1).

1a. I like food. (1st person)

1b. You like food. (2nd person)

1c. He/she/it likes food. (3rd person)

The verb *like* in (1) has the same form in the first two sentences but a different form in the third. The change in (1c) is morphological, with the addition of the morpheme –*s* marking the third person singular.

Lester (1971, p. 47) has also observed that 'the third person singular pronouns are substitutes for nouns but the first and the second person pronouns are not really substitutes for anything'. This is probably because in the first person the speaker or speakers do not identify themselves by name, but by the appropriate pronouns (*I, we*). The same obtains for the second person pronoun too where the addressee is not mentioned by name; except in cases where the speaker is calling attention to or laying emphasis on the addressee, as in (2):

2a. (Adam), stand up!

2b. (Eve, you) come here daily.

2c. (Gentlemen,) sit down.

2d. You boys understand English.

In Yorùbá, while Bamgbose (1980) initially considered *ó* to be a concord marker; he later treats it as a third person singular pronoun subject (Bamgbose, 1990). Awobuluyi (1978) who had also classified pronouns as nouns now claims that the *ó* which usually occurs in the subject position of Yorùbá sentences is a preverbal element or a High Tone Syllable (1992, 2001, 2004). He believes that the subject and object positions are usually empty.

> Sentences featuring the third person singular subject pronoun in the language invariably contain an obligatorily empty subject position. That position remains empty even after being converted into an object position as allowed in focus constructions featuring the following verbs *se/ję*…(2004, p. 352)

Our interest is not to discuss the veracity of the claims, but to confirm the facts surrounding the occurrences of the third person singular (henceforth 3sg) in English, Yorùbá and the other selected Nigerian languages. The crux of the matter is that although similar observations can be made about the 3sg in these Nigerian languages, this has not received much scholarly attention.

It then becomes necessary to compare the languages for similarities and differences and test the possibility of universality of this phenomenon. In this process, we shall look at English, Igbo, Hausa, Yorùbá and Ijẹ̀sà (a dialect of Yorùbá), and attempt answers to the following questions: What is the nature of the 3sg in these languages? Why is the 3sg different from the other persons within the same language? Does the difference perceived in the 3sg in English occur in other languages/dialects?

In what follows, readers' familiarity with English language structures is assumed. Therefore, less information is provided on the occurrence of the 3sg in English. Comparatively, detailed analysis is provided on Yorùbá while less information is provided on the other languages due to paucity of relevant literature on them.

Theoretical Framework

The basic assumption in transformational grammar is that language is universal. Language is universal to the extent that certain features such as Head Parameter, Move-α/Shortest Move and Feature Checking recur in different languages. This phenomenon is encapsulated in the concept of Universal Grammar (UG). UG is "the system of principles, conditions, and rules that are elements or properties of all languages" (Chomsky, 1976, p. 29). It refers to the common features languages share regardless of their variety (Cook and Newson, 1996). Chomsky (1981) discusses these in terms of Principles and Parameters (core and periphery respectively). He identifies principles as the core linguistic values that form a pool which different languages share. Each core principle is, however, parameterized in the sense that different languages set different parameters for the realizations of the principles. Thus, a speaker of a language is assumed to know a set of principles that apply to all languages and parameters that vary within clearly defined limits from one language to another (Cook and Newson, 1996, p. 2).

In the Minimalist Programme, structures are formed through Numeration when lexical items are spilled into the working area for purposes of computation. Each lexical item has a bundle of features that identify it and dictate its usage patterns (Radford, 1988, 1997; Chomsky, 1995; Marantz, 1995; den Dikken, 2000). The formal features of person, number and gender, which are part of the grammatical features of a language, are often identified through the words in the lexicon (den Dikken, 2000). They play significant roles in the computation of structures, where head features are checked against their specifier and complement features. When they check, they are erased and the computation is said to converge. If not, the computation crashes (Marantz, 1995; Radford, 1997).

Of prime importance to this study are the phi-features of person, number and gender. These are required in the realization of the third person singular (3sg) in sentences. When they occur as head features, they must accordingly be matched (checked) by the specifier features (for spec-head (i.e. specifier vs head) relations) and/or complement features (for head-complement features). The 3sg occurs in many languages. Our observation is that the spec-head relation involving the 3sg in English is unique because it differs from spec-head relations of other persons within the language (i.e. 1st and 2nd person singular and plural; and 3rd person plural). The 3sg also occurs in Yorùbá and the other languages under study, but with peculiar features. If the 3sg is taken as a general principle, say the

3sg effect, and the 3sg in English is taken as a norm, in what ways do the 3sg features in the other languages agree or vary? This is the question addressed in this paper.

Methodology of Data Collection

The languages under consideration were purposively selected. English, Yorùbá and Ijesa were purposively selected because of the researcher's familiarity with them. However, since the aim is to explore the universality or otherwise of the 3sg feature in languages, Hausa and Igbo (being the other two major languages apart from Yorùbá in Nigeria) were added. Data on the languages were collected from different sources. First, the Yorùbá and English data were generated largely through introspection by the researcher who is bilingual in both English and Yorùbá. Data from other languages were also sourced from completed research works and published materials, and complemented with data sourced from postgraduate students of English who are bilinguals in English and the relevant indigenous Nigerian languages. For this part, sample sentences were written in English and the informants were asked to provide translation equivalents and similar additional sentences in their respective languages. They were also requested to write out the sets of pronouns in the respective indigenous languages they spoke.

The Third Person Singular in English

Contrary to what obtains for other persons in English, the 3sg has phonetically realized morphological feature realized as *–s* on the verb. Why is this so? First, we may compare verb forms under the phi-features of person, number and gender.

Person

Person is the formal feature that shows who says what to whom about what. Thus, we have 1st, 2nd and 3rd persons. In comparing verb occurrences with persons, the following results are obtained:

3a. I play soccer.

3b. You play soccer.

3c. He/she/it plays soccer.

3d. They play soccer.

Both 1st and 2nd persons of DP (Determiner Phrase) subjects (3a& b) co-occur with the same verb form. However, although the 1st and the 3rd person DP subjects are both singular, they co-occur with different verb forms. While *I* in (3a) is singular, *you* in (3b) is plural. *S/he/it* (3c) is also singular, and one would have expected its verb *plays* to have the same form with the 1st person singular verb

form. However, this is not so. Thus we might say that the feature person is responsible for the morphological change. But this is partly true since the 3sg plural verb in (3d) lacks the morphological marking as other persons. We might, therefore, say that the feature *person* is not wholly responsible for the morphological difference of the verb accompanying the 3sg subject. Let us consider *number*.

Number

Number is the formal feature that relates to the quantity of the DP subject. Thus a singular or plural DP feature co-occurs with appropriate verbs as in (4).

	SINGULAR	PLURAL
4a.	I play soccer -	We play soccer.
4b.	You play soccer -	You play soccer.
4c.	S/he plays soccer -	They play soccer.

Between the singular and plural forms in the spec-head agreement relation above, we note that the plural verb does not reflect any morphological marking but the singular parts have two forms – one without the morphological marking and the other with it. Again, it is the 3sg verb form that has the morphological marking. Thus, *number* does seem to play some role. If this is taken with our discussion under *person* above, we can conclude, tentatively, that both *person* and *number* features collaborate to influence the morphological difference found in the 3sg. However, what about *gender*, the third feature under consideration?

Gender

Gender relates to the grammatical sex of the DP as masculine, feminine or neuter. Consider (5).

5a. He loves himself. (masculine)

5b. She loves herself. (feminine)

5c. It hurts itself. (neuter)

As (5) shows, the verb forms for the different genders remain the same. Even when nouns are involved, the same situation obtains. Thus *gender* does not seem to have any influence on the morphological shape of the verb; rather, it determines the realization of the anaphors.

The next area we explore is the spec-head relations in sentences. In minimalist terms, the INFL requires its specifier (and complement) features to be satisfied by the DP subject. Hence, the spec (specifier) features of INFL must agree in person and while its complement feature requires the verb to maintain null phonetic form for the 1st and 2nd persons (as in 3a&b), but to add –*s* to the verb (as in 2c & 3c). Thus, the feature specification of the 3sg DP can be represented as in (6). Notice that the

major difference between the 3sg and the other DPs is in the value of affix which is positive for the 3sg and negative for others.

6.

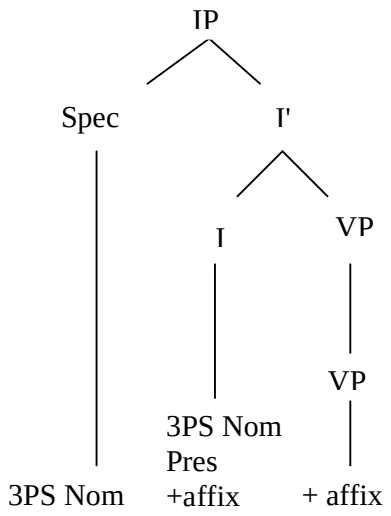

Given the foregoing, it follows that the English 3rd person singular is peculiar in its specifier and complement features. Since the INFL is the head of the phrase, it determines the morphological shape of the agreement features on specifiers and verbs. Thus, whether the verb is principal or auxiliary, the 3sg morpheme is reflected on whichever is closer to the INFL on the tree.

Notice that vacillation of morphemes occurs between verbs and nouns in terms of *Number*. When the Spec-IP (Specifier of Inflection Phrase) is plural, the INFL requires the person/number feature morpheme to be null; but when the Spec-IP is singular, the morpheme is phonetically realized. Finally, when the tense is past, the 3sg agreement morpheme is not realized not only on copula and auxiliary verbs, but also on any other main verb.

The Third Person Singular in Yorùbá

Yorùbá language belongs to the Yoruboid group of languages in the Kwa language family. It has many dialects such as Ijebu, Ondo, Ìkálẹ̀, Ẹ̀gbá, Ọ̀yọ́ and Ìjẹ̀sà (just to mention a few). We shall have cause to discuss aspects of the Ijesa dialect later in this section. Let us begin with Yorùbá, and since INFL is central to languages, we shall start the discussion from Tense, a component within its scope.

Tense

The first observation on verbs in Yorùbá is that they are not inflected for Tense (Odunuga, 1982). Generally, Tense (henceforth T) is assumed to be strong or weak. Strong T has morphological features overtly spelt out; weak T does not (Rohrbacher, 1994; Radford, 1997). In English T is

slightly morphologically realized (reflecting principally on main and auxiliary verbs). In Yorùbá, T is not so marked; verbs in both present and past tenses often have the same form. This accounts for the identical forms of the verbs in (7).

7a. Mo dé
I arrive = 'I arrive/arrived'

7b. O dé
You (sg) arrive = 'You arrive/arrived'

7c. Ó dé
He/She/It arrive = 'He/She/It arrives/arrived'

7d. A dé
We arrive = 'We arrive/arrived'

7e. Ẹ dé
You (pl) arrive = 'You arrive/arrived'

7f. Wọ́n dé
They arrive = 'They arrive/arrived'

Notice that whether singular or plural (*Number)*, 1st, 2nd or 3rd *person* and whether past or present, the verb *dé* 'arrive' has the same phonetic shape throughout in (7). In addition as (7c) shows, DPs do not show gender differences and the verb does not change its form for whatever reason. The situations in Igbo and Hausa are rather different as the two languages have some verbal inflections. However, they play no role in the realization of the 3sg in the languages.

We can then say that although T in both languages is weak, T in English is stronger than T in Yorùbá. T in English has marked features for present and past but T in Yorùbá lacks such markings. However, some Yorùbá sentences which point to future events compare favourably with English in having specific modals to mark future as in (8).

8a. Àwa yóó sùn
We will sleep
'We will sleep'

8b. Èmi á wá
I will come
'I will come'

In (8), *yóò* and *á* mark future Tense just like some modals in English.

DP Subjects

The DP subjects in Yorùbá often show *Person* and *Number* features. *Gender* is not shown (except in certain nouns which reflect a particular gender: *obìnrin* 'female', *ìyá* 'mother', *bàbá* 'father', etc.). However, the influence of *Person* and *Number* is not overtly reflected on the INFL or the verbs. Rather, the DP has certain features which distinguish it from other DPs/pronouns attached to other persons.

Consider the following with the tone patterns stated in brackets – that of pronouns is separated from the others:

9a. Mo ká ilá (M HMH)
I pluck okra = 'I plucked okra'

9b. A ká ilá (M HMH)
we pluck okra = 'We plucked okra'

9c. O ká ilá (M HMH)
you (sg) pluck okra = 'You plucked okra'

9d. Ẹ ká ilá(M HMH)
you (plural) pluck okra = 'You plucked okra'

9e. Ó ká ilá (H HMH)
S/he/it pluck okra = 'S/He/It plucked okra'

9f. Wọ́n ká ilá (H HMH)
they pluck okra = 'They plucked okra'

The first feature we observe in (9) is that all the DP subjects except the 3sg (in 9e&f) bear a mid tone. The 3sg singular and plural bear high tones, and this makes the third person pronouns unique among other pronouns in the language. This is perhaps why Awobuluyi (2004) refers to it as a high tone syllable.

Moreover, there are sets of sentences which lack base-generated subjects even though such subjects may or may not be phonetically realized. Consider:

10a. Ó kí mi
3sg greet me
'S/he greeted me'

10b. Ó pè mí
3sg call me
'S/He called me'

11a. [ ] yóó/áá wá
3sg FUT come
'It will come'

11b. [ ] yóó/áá sùn
3sg FUT sleep
'It/she /he will sleep'

12a. Ó rẹ̀ mí
3sg tire me
'I'm tired'

12b. Ó yé ọ
3sg understand you
'You understand it '

12c. Ó ṣe ni láàánú pé ilé náà wó
3sg do person mercy that house the collapsed
'It is a pity that the house collapsed'

13a. [ ] yóó/áá dára fún ọ
3sg FUT good for you
'You will prosper'

13b. [ ] yóó/áá sú wa
3sg FUT bore us
'We will be bored'

The subject position can be overt or null (indicated with **[ ]**). Whether null or overt, the subject (DP) can also be an argument or an expletive. The subject DPs in (10 &11) are arguments while those in (12 & 13) are expletives. An argument is defined as an element to which theta role is assigned (Horrocks, 1985) while an expletive position lacks such theta role assignment (Chomsky, 1981). Chomsky (1995: 288) observes that English expletives *it* and *there* differ in certain respects. *It* has Case and phi-features and therefore satisfies the requirement of the INFL, erasing relevant features. *There* lacks these features and so does not erase the interpretable features of I-V (inflection vs verb) head. Hence, associate raising is permitted. In Yorùbá, the overt *ó* has the feature 3rd person nominative; it may, however, be an argument (10) or an expletive (12). As an expletive, it tallies with the English *it* discussed above. Notice that *yóó* and *áá* are future tense markers in Yorùbá and they are interchangeable in the structures above. The null subject position can also be an argument (position) (11) or a null expletive (13).The null expletive also lacks the features of person and number since the sentences become anomalous or crash when they feature overt DPs as in:

14a. *Ó yóó/áá yé ọ

14b. *Ó yóó/áá dara

14c. *Ó yóó/áá pẹ́

Given the ungrammaticality of (14), the Spec position of the sentences must be null. By this indication, the sentences in (13) have violated the Extended Projection Principle (EPP) which requires that the subject position of the sentence be filled.

To satisfy this condition, we might propose the existence of a Null Expletive in the position. This expletive has all the features of overt expletives and only differs because it is not overt. This position becomes necessary as it is possible to move items which Chomsky (1995) called 'associates' from an embedded clause to the Spec-IP (specifier of inflection phrase) position of the sentence as in the following:

15a. [ ] yóó/áá wù mí lati ra oko
? FUT like that to buy farm
'It would interest me to buy a farm'

15b. Oko$_i$ yóó/áá wu mi lati ra **t**$_i$
farm FUT like me to buy
'A farm would interest me to buy/ I would like to buy a farm'

Here are the respective analyses:

15a.

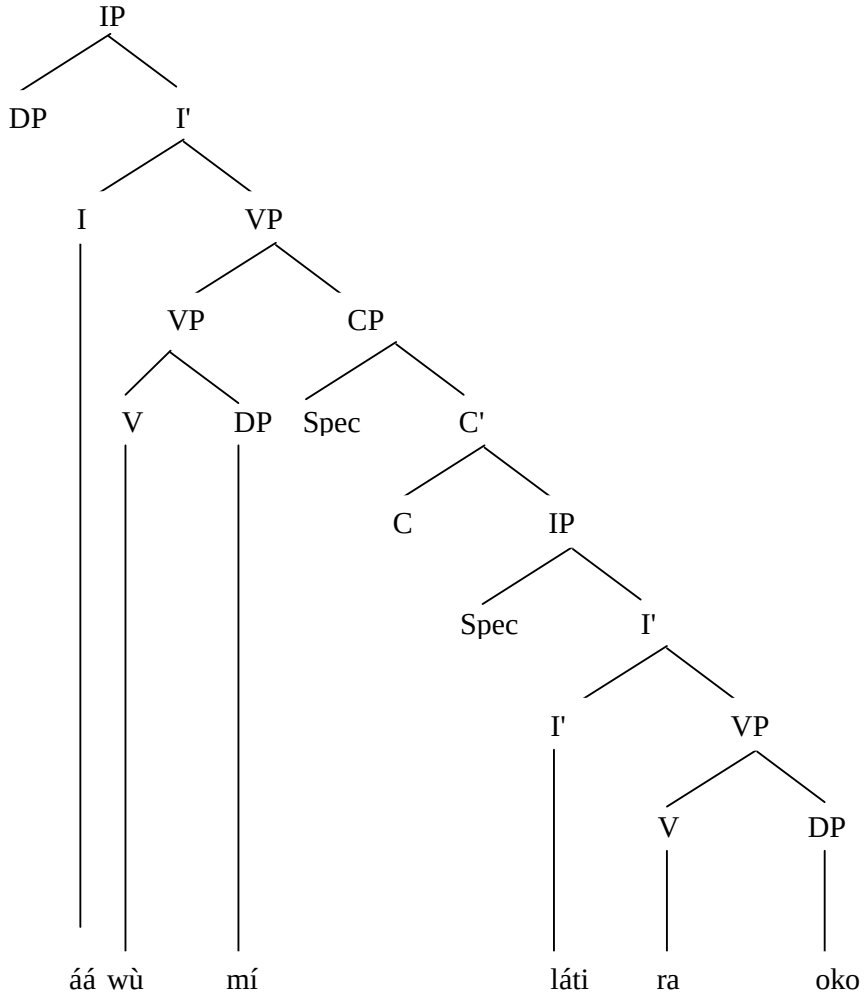

15b.

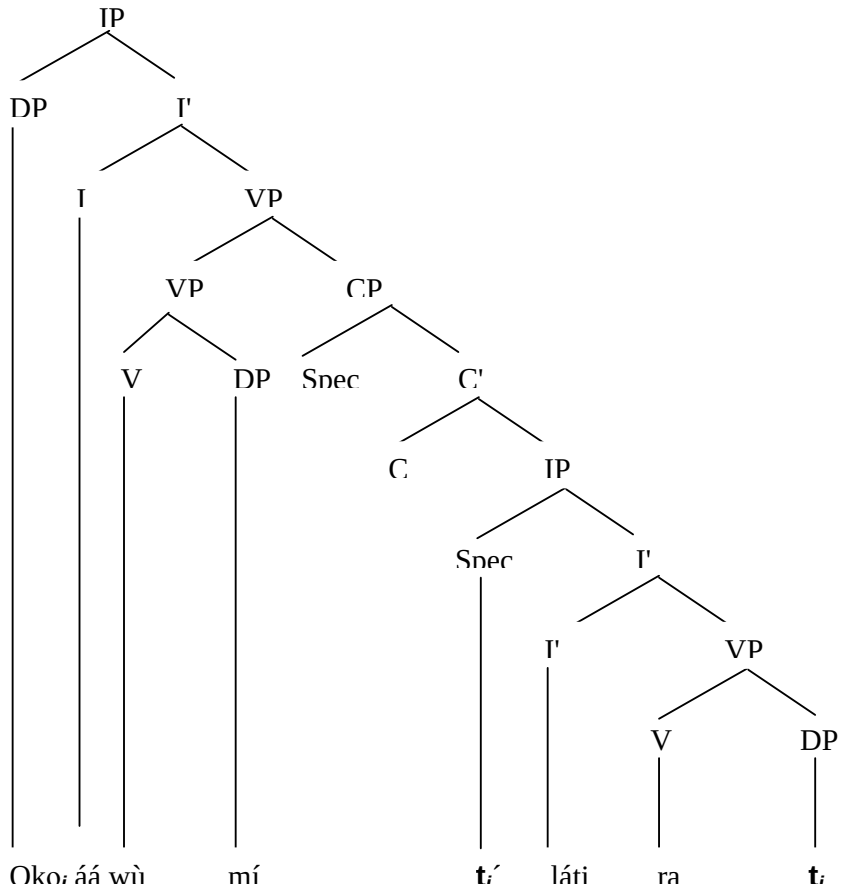

Since both *Ó* and the null expletive yield their DP positions for the moved elements, they compare favourably with English expletives.

In addition, since the null expletive does not permit subjects in the basic structures (14), we assume that it shares a property of dropping its 3sg subject with pro-drop languages. This, however, does not make Yorùbá a pro-drop language since such sentences are few and they are restricted to the future tense in the language. Notice that this feature (of dropping the subjects) is peculiar to the 3sg in Yorùbá and Hausa. English does not seem to share this feature.

Yoruba also differs from English expletives because the ‘associate raising’ occurs only in Yorùbá constructions which have embedded clauses whereas in English, they occur in both basic and embedded sentences, as in (16 & 17):

16a. There is **a man** at the door.

16b. **A man** is at the door.

17a. It seems that **John** is happy.

17b. **John** seems to be happy.

Movement is barred in simple sentences with expletive subjects in Yorùbá because the verb subcategorizes the DP. Thus the DP cannot move to the spec IP position without violating Case Filter and Chomsky's cyclic rule which states that an item cannot use the path already established by another.

18a. Ó rẹ Adé
It tire Ade
Ade tired

18b. *Adé rẹ̀

19a. [ ] áá sú ẹ
? FUT bore you
'You will be bored'

19b. *Ẹ áá sú

The movements of *Ade* and *Ẹ* to the subject positions in (18b & 19b) account for the ungrammaticality of the respective sentences. We can then say that although both languages use raising verbs *seems, appears, likely,* etc (English); and *wù, sú, rẹ̀, dara, ṣeése* etc (Yorùbá), another difference between English and Yorùbá expletives is that expletives occur in basic clauses in Yorùbá but movement is not permitted out of the basic clause into null positions of the 3sg subject. However, movement to expletive positions is allowed in complex sentences.

20a. Ó wù mí láti jẹ ìrẹsì.
3sg like me to eat rice
'I would like to eat rice'

20b. Ìrẹsì$_i$ wù míí jẹ **t**$_i$

21a. Ó dára [kí á pàgọ́ mẹta]
3sg good that we make tents three
'It is good for us to make three tents'

21b. [Kí á pàgọ́ mẹta]$_i$ dára **t**$_i$

Notice that some of these Yorùbá verbs may be used as verbs with base generated 3sg subjects as in

22a. Ìwé yìí wù mí
Book this fascinate me
'I like this book'

22b. Ìlú náà sú mi
town the bore me

‘The town bored me’

What we deduce from the foregoing is that the 3sg position of the Yorùbá DP may be overt or null. For a null DP, we may posit that its formal features are non-overt and these are checked with formal features of its INFL. This position seems correct especially when we consider the 3sg in some negative constructions.

23a. [ ] kò wá
3sg Neg come
‘S/he/it did not come’

23 b. [ ] kò pé.
3sg Neg complete
‘It is not complete’

24a. [ ] kò dára (kí Ade má sùn)
3sg Neg.good that Ade not sleep
‘It is not good for Ade not to sleep’

24b. [ ] Kò ye ki Ade má sùn
3sg Neg fit that Ade not sleep
‘It is not fit for Ade not to sleep’

As basic clauses, the Spec-IP (in 28) has the features person and number, and the position is base-generated. However, it lacks phonetic content. Radford (1997) notes that null subject is permitted where agreement features /inflections are rich. While the AGR (agreement) features of English are poor, those of Yorùbá are relatively poorer; yet, while English conforms to the rules, Yorùbá does not. Why? The reason might be due to the fact that the null position can function either as a null DP or as a null expletive; a feature that is peculiar to the Yorùbá language.

Given this fact (that the null position can be an expletive or an argument position) we have to look at the INFL; since it determines how a spec gets a DP or whether it gets it at all. Usually, movement in expletive constructions is into the Spec IP position (as in 18 & 19 above). However, since the spec position of the Negator is usually null (Zanuttini, 1996), we expect movements in (29) to be into the spec. Thus in (29) above, the items in brackets can be moved to produce the following structures:

25a. [kí Ade má sùn] kò dára
that Ade Neg sleep Neg.good
‘It is not good for Ade not to sleep’

25b. [ki Ade má sùn] kò yẹ
that Ade not sleep Neg fit
‘It is not fit for Ade not to sleep’

Given this possibility, the movements can be to the DP subject or the Spec CP (Specifier of Complementizer Phrase) position. Movement to DP has the problem of neutralizing the distinction between the null expletive and the null argument. To solve this problem, we maintain that the movement in (25) is to the Spec of CP.

In positive sentences, Yorùbá and English are similar because they have covert features embedded in the INFL. In some negative constructions, both languages have null specifier. Compare the (a&b) pairs (which are translations of each other) in the following examples:

26a. [ ] kó níí jó
26b. S/he will not dance

27a. N Kò níí jó
27 b. I will not dance
27 c. He does not dance.

In these sentences, the 3sg is null for Yorùbá but in English (translations), the 3sg is separated from the Negative marker by a modal or an auxiliary (such as *do* in *do*-support) but the first person singular is represented in Yorùbá sentences. The English versions/translations have both. The modal precedes the negative marker in English but in Yorùbá the negative marker follows the subject. This means that contrary to what obtains in English, the negative marker in Yoruba requires a DP as specifier. However, such specifier may or may not be phonetically realized.

So how does the verb check its nominative /accusative features? We can posit that for null expletives in Yorùbá, there is a covert DP to satisfy the Extended Projection Principle. In Yorùbá, the INFL is relatively stronger (than English INFL) and therefore the verbs do not raise. This is strengthened by the fact that the negative marker requires null spec. Although verbs with rich features move, those in Yorùbá do not move. Rather, the features move covertly (not overtly as suggested by Radford (1997, p. 227) to check T and AGR features. How do these move across NegP (Negative Phrase)? We posit that the head features percolate from Verb to Negator and INFL in what Chomsky (1995b) calls 'attraction' within the concept of Minimal Link Condition, defined as follows:

"K attracts α only if there is no β closer to K than α, such that K attracts β" (p. 311).

It follows that languages differ as to whether or not they have strong or weak AGR features (following Radford, 1997) and that the relative strength of these features determine whether or not the non-auxiliary verbs raise.

28.

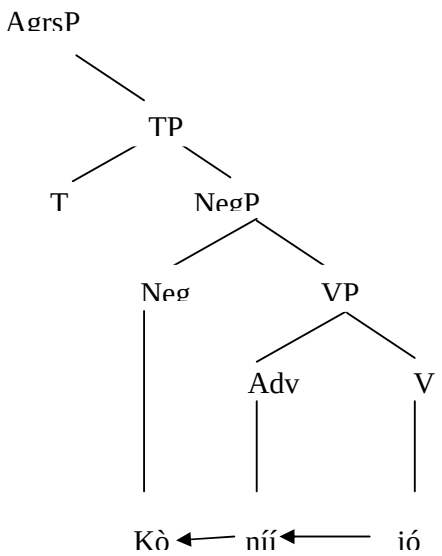

Although strong features are checked by movement, and weak features are checked by attraction in English, this does not seem to be so for Yorùbá. This is possibly because Yorùbá is not very rich in AGR features. While attraction is barred in modern English, it is tolerated in Yorùbá.

The 3sg in Ijesa Dialect

The situation of the 3sg is rather different in Ijesa where tones play significant grammatical roles. Lamidi (2002/2003) observes that floating low tones mark negation in some sentences. We can extend this further to the 3sg in Ijesa and Yorùbá. Consider the following from Yorùbá (29) and Ijesa (30) dialects respectively.

29a Mo lọ (MM)
I go
'I went.'

29b. O lọ (MM)
you go
'You went.'

29c. Ó lọ (HM)
S/He/it go
'S/he/it went.'

30a. Mọ lọ (MM)
I go
'I went.'

30b. Ọ lọ (MM)
You go
'You went.'

30c. Ọ́ lọ (HM)

s/he/it go
'S/he/it went'

In both dialects, the first and the second person singular subject pronouns carry mid tones while the 3sg carries a high tone. This is consequent on the occurrence of a mid tone on the main verb.

Given that tones play a prominent role in the realization of the 3sg in Yoruba and Ijesa, we assume that phonological /phonetic features will form part of the specifier features of the head INFL. By the same token, the 3rd person plural DP also carries a high tone while other persons also have mid tone as in the following analyses:

31.

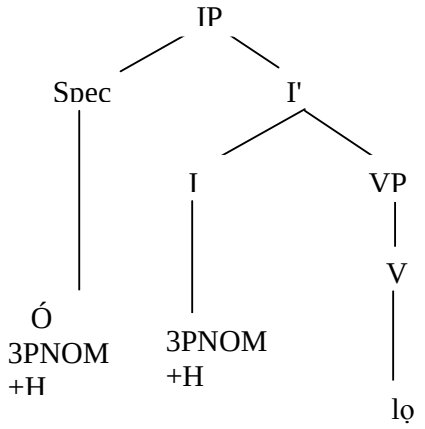

32.

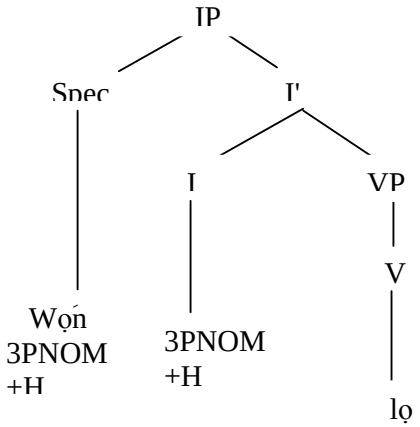

The 3sg DP Object

In the object position, the 3sg also has peculiar features. Witness:

33a. A rí i
We see it
'we saw it'

33b. Olu pa á
Olu kill it
'Olu killed it'

33c. Ade kà á
Ade read it
'Ade read it'

33d. Titi mú un
Titi take it
'Titi took it'

33e. Délé pè é
Dele call him/her/it
'Dele called him/her/it'

In these Yorùbá sentences, the DP object is an extension of the verb. A study of their forms reveals that they have person and number features-the examples (a-e) are those of 3sg pronoun object. The question then is: Why do they have identical vowels with their respective verbs? A possible reason is that their position is base-generated because the original DP had been moved and the pronoun is just a residue of the DP. This position seems justified when we consider similar sentences from Ijesa.

34a. A ri [ ]
We see 3sg
'We saw him/her/it'

34b. Olú pá [ ]
Olu kill 3sg
'Olu killed it/her/him'

34c. Adé kà[´]
Ade read 3sg
'Ade read it'

34d. Tití mu [ ]
Titi take 3sg
'Titi took it'

34e. Delé pè [´]
Dele call 3sg
Dele called him/her/it'

The verbs *ri, mu,* and *kà* are not intransitive verbs in (34). Rather, their objects are understood as 3sg. So we may consider *pro* as a suitable description of their base-generated position.

The tones on the DP objects in (30) are now reflected on the respective verbs in (34). It follows that the 3sg object in (34) is probably weakened in preparation for incorporation into the V. Thus, the following schema might be the real structure:

35.

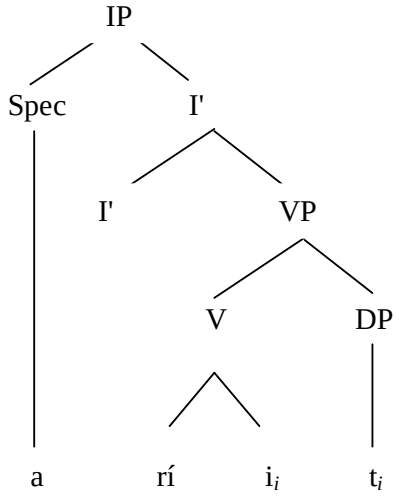

As the schema shows, the object moves to the verb to get its accusative features checked, but in the process, it gets incorporated. The occurrence of floating tones (Goldsmith, 1990) in (34e) where the final low tone is stranded confirms this. It is an indication that the impact of the incorporated 3sg is still being felt.

The 3sg in Hausa

Hausa is classified as Chadic under the Afro-Asiatic language family. The 3sg also has some peculiar features. First, contrary to what obtains in Yorùbá, the 3sg pronoun in Hausa has two distinct forms: masculine and feminine; it does not seem to recognize neuter gender. This is because the language generally marks only these two genders guided by specific rules such as:

a) All plural nouns are masculine grammatically regardless of the their logical sex

36a. mace ‘woman’(singular/feminine)

36b. mata ‘women’ (plural/masculine)

(Lamidi, 1991, p. 25)

b) Gender distinction is grammatical. Singular nouns with *–a/-aa* suffix are mostly feminine gender while masculine nouns end in anything except *–a/-aa*

37a. gora ‘bamboo’ (feminine)

37b. dawa ‘guineacorn (feminie)

37c. hadiri ‘storm (masculine)

37d. jemage ‘bat (masculine)

(Lamidi, 1991, p. 26)

c) Masculine nouns include proper names of male persons (Bala, Condo); Months (Rajab, Safar), and some other exceptional nouns ending in *-a/-aa*

38. *Wataki (moon); saura (*fallow farm) (Lamidi, 1991, p. 26)

Given the foregoing, it is not surprising that 3sg in Hausa is limited to two genders. As in the following

39a. Ya ci doya
He eat yam
‘He ate yam’

39b. Ta ci doya
She eat yam
‘She ate yam’

While (39a) is masculine, (39b) is feminine. Nevertheless, there is no regular pronoun for the neuter gender. Rather, it is improvised as in the following:

40a ya yi ‘he did it
40b. ta yi ‘she did it’
40c. an yi someone did it (it was done)
(Newman and Newman, 1977, p. 142)

Still in the subject position, Hausa has the option of featuring an NP before its pronoun as in the following:

41a. Audu ya ga mutumin na
Audu he see man that
‘Audu saw that man’

41b. Bintu ta je gona
Bintu she go farm
‘Bintu went to farm’

In these examples, whether the nouns (*Audu* and *Bintu*) occur or not, the sentences are correct. Hence, Hausa is said to have the feature of a pro-drop language. Notice that this feature is peculiar to 3sg; it does not occur with other persons:

42a. Na yi ‘I did it’
42b. Ka yi ‘you (masculine) did it’
42c. kin yi ‘you (feminine) did it’
42d. Kun yi ‘you (plural) did it’
42e. mun yi ‘we did it’
42f. Sun yi ‘they did it’
(Adapted from Newman and Newman, 1977, p. 146)

In the object position, the gender distinction on the 3sg is also manifested. The masculine gender is *shi*, while the feminine form is *ta* (Newman and Newman, 1977: 147). Again, the neuter gender is not represented. When we consider 42 above, the neuter gender is also null (since it is not represented).

This same feature is also replicated in the possessive forms of the pronouns. Consider the following: (43) contains suffixed possessive pronouns while (44) contains independent possessive pronouns.

43a. aikinsa
work:of:his
'his work'

43b. aikinta
work:of:hers
'her work'.

44a. nasa 'his'
44b. natà 'hers'
44c. tasa 'his'
44d. tatà 'hers'
(Newman and Newman, 1977, p. 148)

Examples in (44) are unique because despite their meanings and referents, (44a & b) refer to masculine nouns while (44c & d) refer to feminine nouns. There is no possessive pronoun for neuter gender.

Finally, we want to observe that tone distinguishes between otherwise ambiguous words in Hausa. Consider the following

45a. bàba 'eunuch'
45b. baba 'indigo'
45c. babą̀ 'mother'
45d. bàbą 'father'
(Newman and Newman, 1977, p. 8)

However, it does not seem to play any role in the workings of the 3sg.

The 3sg in Igbo

Igbo belongs to the group of Igboid languages. In Igbo, the 3sg pronoun is realized as *O/ Ọ* (Uwalaka, 1997, p. 43). It occurs in the following sentences:

46a. Ọ zere uzere
3sg sneeze sneezing
'S/he sneezed'

46b. Ọ hụrụ m n'anya
3sg love me
'She loves me'

46c. Ọ fụrụ gi ụfụ
3sg hurt you
'S/he hurt you'

46d. Ọ n'egwukari egwu
3sg play play
'S/he plays'

46e. Ngozi gbàrà ya úkwú
Ngozi kick 3sg leg
'S/He/it kicked him/her/it'

46f. I kpọ´rọ´ ya asi
You hate 3sg
'You hate it'

In 46, the 3sg subject does not distinguish between genders (as in Yorùbá pronouns); rather, all the three gender interpretations are possible. In the object position, the 3sg is also realized as *ya* (Uwalaka, 1997: 43); a pronoun which is also not marked for gender as seen in (46e&f). The same also occurs with Igbo possessive pronouns as in (47).

47a. nne ya 'his/her mother'

47b. nna ya 'her/his father'

47c. ọ´dụ̀dụ̀ ya 'its tail'

It follows then that Igbo does not distinguish among the three genders recognized in English.

Igbo is also a tonal language, just like most Nigerian languages. According to Uwalaka (1997), tone is lexicalized in Igbo, distinguishing between otherwise ambiguous words as in

48a. ákwá 'cry'

48b. ákwà 'cloth'

48c. àkwá 'egg'

48d. àkwà 'bed'

Tone is also a grammatical element. It contributes in the realization of lexical elements. For instance, consider (49).

49. Ọ´ zụ̀tàrà ázụ̀
3sg buy fish
'She bought fish'

Such a statement as (49) becomes a Yes/No question when the high tone on the 3sg pronoun is changed to low tone (Uwalaka, 1997:43) as in.

50. Ọ̀ zụ̀tàrà ázụ̀
3sg buy fish
'Did she buy fish?'

Thus, tone is also significant in Igbo.

Conclusions

The study has explored the occurrence of the 3sg in English, Hausa, Igbo, Yoruba and Ijẹ̀sà. It is observed the third person feature can be parameterized over languages. In English, the three genders are marked on the 3sg pronoun, but the 3sg is not marked for gender in Yorùbá, Igbo and Ijẹ̀sà. In Hausa, gender can be masculine or feminine but not neuter (the neuter gender is not recognized). Furthermore, gender marking is not restricted to the 3sg DPs. Rather, it cuts across most nouns.

In addition, the 3sg subject is usually overt in all the languages under study, but it may be null in Yorùbá and Hausa declarative statements. The existence of null expletives in subject positions of Yorùbá sentences violates the Extended Projection Principle (EPP). To satisfy this principle, it is proposed that there is a null expletive and DP movement does not land in the Spec-IP position, but rather in Spec-CP.

The 3sg is realized in Ijẹ̀sà in subject positions with overt DPs and tones different from those of other persons; in the object position, the 3sg pronoun is not realized and in Yorùbá, it is realized by lengthening the vowel of the transitive verb. In Ijẹ̀sà, the 3sg object is null; in standard Yorùbá it is an extension of the final vowel of the verb and in Igbo it is invariant.

Our observations on the spec-head relations is that tense is not overt in Yorùbá and Ijẹ̀sà, so their verbs have no morphological change. However, the morphological change of the verb in English stands out the third person singular. In Igbo and Hausa, there are morphological changes, but these do not affect the realization of the 3sg DP.

Due to the importance of tone both as a lexical element and as a grammatical element in the Nigerian languages especially its roles role in the realization of the 3sg (especially in Ijẹ̀sà), we suggest that tone is a lexical element required in the computation of structures. Since tone is a suprasegmental feature rather than a segmental feature, we assume that it is merged with a lexical item before it is submitted to the spell-out on the way to PF and finally at PF. This means that the computation machine has to be revised to accommodate tone as a lexical item that can be targeted and merged in computation. Thus, realizations of tone (as spread or floating) in tonal languages can be explained.

Having looked at the 3sg in different environments in the languages, we conclude that there are similarities and differences in the features of the third person singular in both languages. We aver, therefore, that the 3sg effect is a core property (probably universal) with each language setting its own values on its realization in the language.

In addition, certain observations are made about other Nigerian languages which needs further probing. We hereby draw attention to the phenomenon of the 3sg in those languages.

References

Awobuluyi, O. (1978). *Essentials of Yoruba Grammar*. London: Oxford University Press.

Awobuluyi, O. (1992). Aspects of Contemporary Standard Yoruba in Dialectological Perspective. In A. Ishola (Ed.) *New Findings in Yoruba Studies* (pp. 1-79). Ibadan: Odunjo Memorial Lectures.

Awobuluyi, O. (2001). Arọ́pò-Orúkọ Kúkúrú Ẹni Kẹta Asolùwà' in Yorùbá. *A Journal of the Yorùbá Studies Association of Nigeria 2*(1), 1-9.

Awobuluyi, O. (2004). Subjectless Sentences in Standard Yoruba. In K. Owolabi and A. Dasylva (Eds.) *Forms and Functions of English and Indigenous Languages in Nigeria* (pp. 239-257). Ibadan: Group Publishers.

Bamgbose A. (1980). Pronouns, Concord and Pronominalization in *Africa und Ubersee, Band LXIII*, 189-198.

Bamgbose, A. (1990). *Fonologi ati Girama Yoruba*. Ibadan: University Press.

Chomsky, N. (1976). *Reflections on Language.* London: Temple Smith.

Chomsky N. (1981). *Lectures on Government and Binding: the Pisa Lectures.* Dordrecht: Foris Publications.

Chomsky, N. (1995a). Bare Phrase Structure. In G. Webelhuth (Ed.) *Government and Binding and the Minimalist Program* (pp. 383-439). Cambridge, Massachusetts: Blackwell.

Chomsky, N. (1995b). *The minimalist program.* Cambridge: MIT Press.

den Dikken, M. (2000). The syntax of features. *Journal of Psycholinguistic Research 29*(1), 5-23.

Gimson, A.C. (1980). *An Introduction to the Pronunciation of English.* London: The ELBS and Edward Arnold (Publishers) Ltd.

Goldsmith, J.A. (1990). *Autosegmental and Metrical Phonology.* Oxford: Basil Blackwell.

Horrocks, G. (1985). *Generative Grammar.* London: Longman.

Lamidi, M.T. (1991). *A Contrastive and Error Analysis of the Written English of Hausa Speakers.* Unpublished BA Essay, University of Ibadan.

Lamidi, M.T. (2002/2003). The tone as a negative marker in Ijesa sentences. *Poznan Studies in Contemporary Linguistics 38*, 89-101.

Lamidi, M.T. (2003). *The Head Parameter and Grammaticality in Yoruba-English Code-Switching among Undergraduates in Selected Universities.* Ph.D. Thesis, University of Ibadan.

Lamidi, T. (2004). Agreement Relations in English and Yoruba. *IBADAN: Journal of English Studies. I,* 35-53.

Lester, M. (1971). *Introductory Transformational Grammar of English.* New York: Holt Rinehart & Winston Inc.

Marantz, A. (1995). 'The minimalist program' in G. Webelhuth (Ed.) *Government and binding theory and the minimalist program.* (pp. 349-382). Oxford and Cambridge: Blackwell.

Newman, P. and R.M. Newman (1977). *Modern Hausa-English Dictionary.* Ibadan & Zaria: Oxford University Press.

Odunuga, S. (1982). Tense and Aspect in Yoruba. In A. Afolayan (Ed.) *Yoruba Language and* Literature (pp. 264-276). Ibadan: University Press.

Radford, A. (1988). *Transformational Grammar: A First* Course. Cambridge: Cambridge University Press.

Radford, A. (1997). *Syntactic Theory and the Structure of English: A Minimalist Approach*. Cambridge: Cambridge University Press.

Rohrbacher, B. (1994). English Main Verbs Move Never. *IRCS Technical Report Series.* Retrieved 31/7/2007 from http://repository.upenn.udu/irce_reports/150.

Uwalaka, M.A. (1997). *Igbo Grammar.* Ibadan: The Pen Services.

Zannutini, R. (1996). On the Relevance of Tense for Sentential Negation. In A. Belleti and L. Rizzi (Eds) *Parameters and Functional Heads: Essays in Comparative Syntax* (pp. 181-208). Oxford, New York: Oxford University Press.

The Linguistics Journal

Vygotsky and Linguistic Relativity: The Case of Chinese and English Reading

John F. Ehrich
Research Fellow, School for Social and Policy Research
Charles Darwin University, Australia

Biodata

John Ehrich has worked for over ten years as an ESL teacher and teacher of English to native speakers. He has also worked as a curriculum designer for primary school social studies student and has recently completed a Ph.D. in cognitive psychology at Queensland University of Technology.

Abstract

This paper argues the case of linguistic relativity through a Vygotskyan socio-cultural perspective. A major tenet of Vygotskyan socio-cultural theory is that sign systems (e.g., language) are psychological tools, which after a period of internalization, result in a transformation of inner processing. The logical extension of Vygotskyan socio-cultural theory is that the internalization of different sign systems, such as Chinese logographic characters or English alphabetic script, should invariably result in the development of distinct types of inner processing. This argument is essentially one of linguistic relativity, or the idea that the nature of language itself can impact on cognitive processing. Evidence to support this argument is found in behavioural and neuroanatomical studies. Finally, some implications to ESL pedagogy are discussed within a relativist framework.

Keywords: Vygotsky, linguistic relativity, Chinese reading, orthography, socio-cultural theory

Introduction

Linguistic relativity, the idea that culture, through language, can impact on thought processes was largely discredited as an argument due to research which arose in the 1960s involving cognitive science (Gumperz & Levinson, 1996). This research emphasized that cognition was universal across linguistic and cultural traditions. In addition to this, there is a general reluctance for researchers to adopt the stance of linguistic relativity because anthropologists and comparative linguistics are fearful

to report differences in cognition between cultural members (Lucy, 1996). The idea that cognition is the same across languages and cultures is a more ethically well-received ideology than that of linguistic relativity, which has been associated with evolutionary and racist theories in the past (Lucy).

Instrumental to the notion that cognition is universal across languages and cultures is the general assumption that thought shapes language. That is, languages may vary in terms of content, but the cognitive processes by which this language is interpreted do not vary (Lucy, 1996). Hence, language can fluctuate and therefore be influenced by thought processes, but thought processes cannot fluctuate and hence be influenced by language. In this paper, the argument is that, in accordance with Vygotskian sociocultural theory (1978, 1986), language shapes thought. Therefore, the particular argument here, which adopts linguistic relativity as central to its case, is a controversial one.

It should be noted however, that Vygotskian sociocultural theory (1978, 1986), which is advocated as an appropriate theoretical framework for studies in various fields, such as education (e.g., Daniels, 2001), and second language acquisition (SLA) (de Guerrero, 1994,1999; Schinke-Llano, 1993), implies a theory of linguistic relativity. The essential tenet of Vygotskian sociocultural theory is that language is internalized and through this internalization, higher level thought processes are developed. Hence, it is untenable to adopt Vygotskian sociocultural theory as an epistemological stance and then to reject outright linguistic relativity as a legitimate or valid theory. In effect, Vygotskian sociocultural theory is an explanation and an endorsement for linguistic relativity, that the psychological tools of language shape the inner environment of mind.

Recently, the case for linguistic relativity has gathered support from the field of cultural anthropology (e.g., Gumperz & Levinson, 1996; Levinson, 1996; Lucy, 1996). In one study, Levinson examined several cultural groups in regard to their spatial conceptualizations. These cultural groups did not comply with generally accepted universals in terms of spatial conceptualization such as ego style prepositions. Instead they rely on angle systems as points of reference. For example, a tribe of remote Indigenous Australians, the Guguu Yimithirr, use a system of orientation whereby "…spatial arrays are memorized in terms of absolute, fixed directions, not in terms of egocentric coordinates" (Levinson, 1996, p. 181). Whereas an English speaker would use his/her physical body's orientation as a frame of reference by which to either process or describe directions (e.g., *to my left* or *to your left*), the Guguu Yimithirr speaker thinks in terms of absolute angles which are continually fixed, irrespective of the position of the speaker. This system is a very effective navigational device as Guguu Yimithirr speakers have shown to be able to travel to locations using this method with an average error of less than 14 degrees. The point here is that, even

with something as seemingly universal as spatial conceptualization, there are cultural variations which influence language and vice versa. The fact that Guugu Yimithirr speakers remember spatial concepts differently to say, English speakers, and that this is evident in their linguistic system, reinforces the notion that language can influence thought and that visual memory can differ across cultures.

In summary, linguistic relativity is a controversial theory. Part of this controversy stems from its perception as a less ethically sound theory than the notion of cognitive universalism. Recently, linguistic determinism has found support from studies in the field of cultural anthropology. Vygtoskian sociocultural theory, which has received strong endorsements from the fields of SLA and educational research, is in fact a theory which supports a linguistic relativity position, i.e., that language shapes thought. Hence, even though linguistic relativity is controversial, it is a valid theory in the context of a Vygotskian sociocultural framework.

Vygotskyan sociocultural theory

The origins of Vygotsky's cultural-historical theory stem from Marxist thought and distinguish two lines of development, biological evolution as explained by Darwin and the historical development of humanity as explained by Marx and Engels. Vygotsky argued that all humans shared the same physiology and described the behaviour that was determined by this shared physiology as the lower psychological processes. What did constitute difference between people was their cultural behaviour that was determined through the mastery of sign systems. This mastery of sign systems produced a transformation in thinking (Van der Veer & Valsiner, 1991).

This transformation in thinking was achieved through a process of internalization in which the sign system and language were the key ingredients. The process of internalization is described by Vygotsky (1978) as an "…internal reconstruction of an external operation" (p. 56). An example of this is contextualized by Vygotsky (1978), who uses the pointing gesture of a child to explain internalization. A child who has not yet learned to speak sees an object and desires it, and tries to grasp it with his/her hands. The mother, seeing that the object is out of reach of the child, gives it to the infant. In the infant, who realizes the connection between the two instances (the pointing gesture toward the object and the receiving of the object by the other (mother)), there is essentially a change in function of the movement, that is, from the object to the person. Hence, the relationship between the object and the infant has changed from a simple gesture of grasping toward the object, to a symbolic act or signal of pointing toward the object, an example of communication to the other, as a means of accomplishing desire. The symbolic act of pointing constitutes a first communicative step in the ontogenesis of the child toward the mediating tools of signs and, later on, language.

The process of internalization as described by Vygotsky (1978) has three levels of transformation. The first level occurs when an initial external operation is reconstructed as an internal one (as depicted in the pointing/child analogy). The second level occurs when interpersonal processes are transformed into intrapersonal processes. On this level, the cultural traditions of the group become internalized in the individual. Vygotsky (1978) states,

> Every function in the child's cultural development appears twice: first, on the social level, and later, on the individual level. (p. 57)

Here, the quintessence of his theory of sociocultural development is defined, that is, that all the higher mental functions such as voluntary attention, logical memory, and concept formation, have their origins as a consequence of human interaction.

The third level occurs after a long series of development (the transformation of the interpersonal to the intrapersonal). On completion of the internalization process, the resulting inner functions follow their own systemic rules. During all three levels of transformation, integral to the internalization process is the sign system, which is perceived as essential to the internalization of cultural forms of behaviour (Vygotsky, 1978).

Therefore, Vygotskian sociocultural theory depicts higher thought as arising out of social contact and as being mediated by language and sign systems. Essentially, the mastery of language/sign systems provides a transformative effect in thinking. This transformation in thinking is achieved through a process of internalization whereby the sign system and language are the key ingredients. From this premise, it follows that orthography, the writing system of language, would also play some part in this process. That is, orthographies or writing systems, as psychological tools or signs, once inculcated and internalized culturally, may impact on cognitive processing. Furthermore, different orthographic systems may result in variant forms of cognitive processing. The next section will argue that orthographies are different and that such differences result in variant cognitive processing.

Orthographic differences

Mattingly (1992) lists six major orthographic traditions: (1) Mesopotamian cuneiform, (2) Cretan, (3) Chinese (including Korean and Japanese), (4) Mayan, (5) Egyptian, and (6) West Semitic (including Phoenician (c. 1600 B.C.) and Ras Shamrah cuneiform, Old Hebrew, South Arabic, Aramaic, and Greek alphabetic writing). Today, the major orthographic systems can be broken down into three main types: logography (e.g., Chinese), alphabets (e.g., English), and syllabaries (e.g., Korean Hangul). There are significant structural differences between these three orthographic types.

The major difference lies in the nature of the graphemic units associated with each orthography. In logography, such as Chinese characters,[1] a single graphemic unit constitutes a meaning and has an associated pronunciation. This is known as addressed phonology. Therefore, the pronunciation of a Chinese word is recalled from memory and is not constructed through the assemblage of individual sound units (Patterson & Coltheart, 1987). Of course, there are phonetic radicals within these characters that can enable the access of pronunciation via internal structure. However, these radicals are not reliable. For example, from a list of 1522 phonetic radicals, only 18 provide consistent pronunciation for more than three compound characters totalling 98 characters in all (Gao, 1983). Therefore, generally speaking, logographic readers must recall a Chinese character's pronunciation without the aid of phonemic or syllabic clues (see Shen & Forster, 1999, for a more complete discussion).

In alphabets and syllabaries, the smallest graphemic units represent a sound code, such as the phonemes of alphabets and the syllables of syllabaries. These sound codes are assembled together to form a word's phonology (Patterson & Coltheart, 1987). This is a major point of contrast with logography, where the word's pronunciation is not apparent through a graphemic configuration. Alphabetic and syllabic readers can access a word's phonology through the assemblage of graphemic units and, in some cases, can even access a word's phonology before the display of the entire word (Pollatsek, Lesch, Morris, & Rayner, 1992). In contrast, logographic readers must largely recall a word's phonology from memory.

The degree to which an orthography conforms to grapheme-to-phoneme correspondence (GPC) rules determines whether it is "deep" or "shallow" (Katz & Frost, 1992). For example, Chinese has no GPC rules and can therefore be considered a "deep" orthography (Hoosain, 1991). In contrast, the letters of some languages, such as Serbo-Croatian, directly correspond to the phonemes of the spoken language and therefore can be considered "shallow" orthographies (Katz & Frost). The Orthographic Depth Hypothesis (ODH) proposes that the shallower the orthography, the greater the amount of phonological recoding is carried out in order to attain lexical access (Katz & Frost). That is, a reader of a Serbo-Croatian text would systematically analyse the internal components (letters) of words in order to retrieve a phonological code, which would then trigger a lexical association. Therefore, a particularly shallow orthography, such as Serbo-Croatian, would involve more phonological recoding than logographic Chinese in the attainment of lexical access from printed words. There is growing evidence that the ODH is an accurate reflection of early second language (L2) reading behaviour (Grabe, 2002).

Different orthographies appear to be processed differently

So, how do these orthographic differences translate into cognitive processing differentials? In terms of reading research, much has focused on word identification, that is, how meaning and pronunciation codes are accessed from the written word (Seidenberg & McClelland, 1989). In terms of English word identification studies, much research into the reading of English has focused on the role of phonological processing of text (Stanovich, 2000). Even though the case has been argued against a strong role of phonology in reading English (e.g., Coltheart, 1999; Damian & Martin, 1998), and Dual Route models include a combination of phonological, orthographic and semantic processing (e.g., Coltheart, 1980; Coltheart & Rastle, 1994; Coltheart, Rastle, Perry, Langdon, & Ziegler (2001), the general consensus is that phonological processing is primary (Perfetti, 1999; Stanovich, 2000). In contrast, there is less agreement on the role phonology in Chinese character reading. For example, several studies have indicated that phonological processes are important in the mediation of lexical information from Chinese orthography (e.g., Flores d'Arcais, Saito, & Kawakami, 1995; Hung, Tzeng, & Tzeng, 1992; Zhou & Marslen-Wilson, 1999; see Perfetti & Zhang, 1995 for review). However, many other studies suggest that phonological processes play a reduced role (or in some cases no role) in Chinese word identification (e.g., Chen, Flores d'Arcais, & Cheung, 1995; Ju & Jackson, 1995; Shen & Forster, 1999; Tan, Hoosain, & Peng, 1995; Wong & Chen, 1999; Zhou & Marslen-Wilson, 2000; Zhou & Marslen-Wilson, Taft, & Shu, 1999). Hence, even though this area of reading research is highly contentious, with different processes agreed and disagreed upon, a general pattern can be determined; Chinese word identification requires more orthographic (visual) processing than English reading, which has a stronger focus on phonological processing.

This pattern is clearly identified in the research of Hanley and Huang (1997) and Feng, Miller, Shu, & Zhang (2001). For example, Hanley and Huang investigated the relationship between phonological awareness and reading ability in Chinese, Taiwanese, and British school children, who were tested on phonological awareness tasks such as rhyme ability and phoneme deletion. Visual skills were tested also using the Visual Paired Associates (VPA) test. This test required children to learn the colours associated with six abstract line drawings for later recall. This task was selected because of its perceived similarity to the learning of Chinese characters. For the Chinese and Taiwanese children, phonological awareness was not significantly correlated with reading ability. By contrast, the British children demonstrated a strong correlation between their level of phonological awareness and their reading ability. Visual skill was the most powerful predictor of Taiwanese and Chinese children's reading ability, suggesting that visual processing plays an important role in the acquisition of Chinese characters. This study suggests that phonology plays a crucial role in English

word identification, whereas in Chinese word identification visual/orthographic processes are predominant.

In addition, cross-linguistic differences have been shown when adult readers of English and Chinese were compared. For example, in a recent cross-linguistic study, Feng et al. (2001) investigated the role of phonological processes in Chinese and English word identification. Both the time course of phonological activation in reading Chinese (Experiment 1) and English (Experiment 2) were explored. Target words and target characters were embedded in English and Chinese passages, respectively. These target words/characters were contextually inappropriate and consisted of orthographically similar and dissimilar homophones (e.g., *creek – creak*), orthographically similar control words (e.g., *creed*), and dissimilar control words (e.g., *gland*). Eye tracking data associated with the embedded targets revealed early phonological activation when reading in English but not Chinese. For example, dissimilar homophones provided early benefits for English readers but not for Chinese readers. At first glance, this suggests that, when reading in Chinese, phonology is not activated, in direct contrast to the observed pattern for English. Consistent with Hanley and Huang (1997), visual processing was shown to be more important in Chinese reading while phonological processing may have a greater role in English alphabetic reading.

Chinese orthography and visual processing

In Chinese character identification, the orthographic structure is crucial to lexical access, whereas phonology may play a reduced role (e.g., Chen et al., 1995; Ju & Jackson, 1995; Shen & Forster, 1999; Tan et al.,1995; Wong & Chen, 1999; Zhou & Marslen-Wilson, 2000). Therefore, for logographic readers, the orthographic (visual) structure of the character plays a crucial role in word identification. Thus it seems reasonable to posit that logographic readers are potentially more reliant on visual information as a means of processing written text than their counterpart readers of alphabetic script.

The visual complexity of the Chinese writing system would appear to require such reliance. In mainland China, school children (grades 1 to 6) internalize approximately 2,570 distinct Chinese characters as part of their general literacy (Shu, Chen, Anderson, Wu, & Xuan, 2003). The Chinese characters that are taught increase in visual complexity as the primary school children progress each year, with 95% of the characters averaging between 7 to 12 strokes (with 1 stroke the least and 24 strokes the most complicated) (Shu et al.). In addition to the visual complexity of Chinese orthography, the pronunciations of each character are far less systematic and regular than those of alphabetic languages (see Hoosain, 1991). As Chinese school children learn progressively more and more structurally complex characters, these characters become less and less reliable in terms of their

pronunciation cues. For example, of the 2,570 distinct Chinese characters that school children must acquire, there are 650 phonetic compounds that contain regular phonetic cues, 370 with ambiguous phonetic cues, and 720 non-phonetic cues. In all, only 23% of Chinese character compounds with phonetic radicals are perfectly regular (Shu et al.). Given the low incidence of phonetic regularity it would appear that the memorization of complex visual orthographic structures occurs largely without the facilitating effects of phonology. Therefore, during the critical period of language internalization, Chinese children are inculcated with an incredibly complex visual writing system that has a limited reliance on pronunciation cues.

Hence, the transformative power of the internalization of a highly visual/graphic writing system may have led to a heightening of visual processing skills and strategies for logographic readers. These skills may be less developed in readers of alphabets or syllabaries who have not internalized a visually complex orthographic system. Instead, the inculcation of an alphabetic or syllabic orthographic system may have developed literacy skills which are particularly suited to processing alphabetic or syllabic script (e.g., phonological skills). Recall that Hanley and Huang (1997) found that visual skills were the reliable predictor of Chinese (logographic) children's logographic reading skill, whereas phonological skills were the reliable predictor of British children's alphabetic reading skill.

It is possible that the learning of thousands of complex Chinese characters, which resemble pictures, may lead to a particularly efficient visual processing system, especially in terms of memory for complex visual shapes. Indeed, a number of studies have shown that L1 logographic background participants outperform L1 alphabetic background participants on a variety of memory tasks, such as visuo-spatial WM tasks (e.g., Demetriou, Kui, Spandoudis, Christou, Kyriakides, & Platsidou, 2005), memory for abstract visual shapes (e.g., Flaherty, 2000; Mann, 1985), spatial memory (e.g., Tavasolli, 2002) and on tests requiring spatial processing (e.g., Stevenson, Stigler, Lee, Lucker, Kitamura, & Hsu, 1985; Stevenson & Ying-Lee, 1990; Tamaoka, Saklofske, & Ide, 1993).

Furthermore, studies have shown that basic cognitive processes can be developed into highly sophisticated cognitive behaviour under certain learning conditions. For example, Stigler, Chalip, and Miller (1986) found that, as a result of abacus training, children had a different representation of numerical calculations based on a 'mental abacus' that enabled them to manipulate numbers with remarkable speed. These children portrayed no other such amazing abilities. In a similar, developmental fashion, logographic background literates, such as Japanese and Chinese readers, may have a particularly well-developed visual system that allows them to process text without a strong reliance on phonological access, as has been demonstrated by the Chinese word identification studies (e.g., Chen et al., 1995; Ju & Jackson, 1995; Tan et al., 1995).

Evidence that logographic orthographies may require cognitive processing that is closer related to pictures and visual phenomena than alphabetic and syllabic writing systems come from studies of general cognition and neuroimaging. The evidence is both behavioural and physiological, as discussed below.

Evidence from cognition and neuroimaging

Rusted (1988) investigated the relationship between picture processing and reading in Chinese-English bilinguals and monolingual English speakers using a picture-word interference paradigm. Pictures and superimposed words were either semantically related (closely or distantly) or semantically unrelated. The interference levels were comparable overall between the Chinese-English bilinguals and English monolinguals, however bilinguals responded more slowly to pictures and Chinese text. These results support the notion that visual/pictures correspond more closely with logographic script than pictures/imagery with alphabetic script.

Similar observations were made by Chen and Tsoi (1990) who investigated whether logographic background language users and alphabetic background language users process words and symbols differently. Chinese-English bilinguals and American monolinguals were asked to read words and name symbols (calculation symbols such as *plus*, *minus*, *divide*, and *times*) in their native tongue. English and Chinese words were superimposed over pictures of the calculation symbols (e.g., a *plus* sign with the Chinese character representing *minus* or the English word for *minus*) to provide Stroop style interference effects. The pattern of results was different for the Chinese-English bilinguals and English monolinguals. The Chinese-English bilinguals were equally fast in naming calculation symbols and Chinese logographs. The monolinguals, however, took longer to name calculation symbols than to read English words. Also, for the bilinguals, Chinese logograph distractors generated more interference in word naming while symbol distractors generated more interference for symbol naming. For the monolinguals, English distractors were associated with larger interference effects when naming symbols. The results suggest that Chinese-English bilinguals process symbols similarly to the Chinese writing system whereas English monolinguals process symbols and the English writing system differently.

One problem with interpreting the findings of Rusted (1988) and Chen and Tsoi (1990) is that bilingual and monolingual groups were compared. Caution is needed when making such comparisons because prior research has indicated that bilinguality can enhance cognitive performance on language processing tasks (see Cenoz, 2000). Therefore, the performance advantage found in Chen and Tsoi and Rusted simply may have been the result of a bilingual language learning history. However, these studies do provide some evidence that the Chinese writing system may be closer to picture processing

than English. This suggests that Chinese orthography may require more visually orientated processing than alphabetic English, consistent also with Hanley and Huang's (1997) study which found a correlation between visual processing skills and reading in Chinese school children.

Furthermore, a number of studies have found that a L1 logographic background may enhance visual and spatial memory performance. For example, Mann (1985) investigated the phonological and visual memory skills of Japanese[2] children in regard to their reading ability. Primary school aged Japanese children were tested on their ability to remember abstract visual designs, having to indicate any design that occurred more than once in a set. Their recognition of Kanji and Kana words was similarly tested. Reading ability and memory for visual abstract shapes were significantly correlated. Mann compared these data with an earlier study by Liberman, Mann, Shankweiler and Werfelman (1982) on American school children in which a similar correlation was not found. A comparison of the data showed that Japanese school children had better memory for abstract visual designs. Mann also found a correlation between memory for Kanji and abstract visual designs but no correlation for abstract visual designs and Kana. This study clearly demonstrates that (1) logographic background readers are better at tasks that involve visual memory for abstract designs than phonographic background readers, and (2) Kanji or logographic script is closer associated with abstract visual designs than phonographic (syllabic) script (Kana).

Mann's (1985) study focused on visual memory for abstract designs and found that a L1 logographic background benefits this type of processing. Additionally, there is evidence that an L1 logographic background may benefit spatial memory. For example, Tavasolli (2002) compared a group of Chinese-English bilinguals and English monolinguals and tested them on their spatial memory for animals, which were visually presented on cards as written words (in English and Chinese) and as pictures. Participants were told to study the cards for a short period of time. After a short math filler task, they were given new cards which had the same items but in different locations on the cards. In the Chinese-English bilinguals, spatial memory for Chinese characters was better than for alphabetic words. Monolinguals recalled the spatial location of animal pictures better than animal words, whereas there was no difference for the Chinese group's recall of the positions of animal pictures and Chinese characters. These findings support studies, such as those of Rusted (1988) and Chen and Tsoi (1990), which have shown that Chinese characters bear a closer relationship to picture processing than English words. In addition, it appears that the processing of logographic script is more closely associated to spatial processing than alphabetic script. However, here too differences in language background were not controlled for.

More convincing evidence that the Chinese writing system requires more visual processing than alphabetic writing systems such as English can be found in the studies of Nakagawa (1994) and

Hatta (1992). In these studies, the hemispheric processing of Chinese characters was examined, revealing a right hemisphere bias for Chinese characters. This is significant because the right hemisphere has been associated with visual processing (e.g., Chiarello, Burgess, Gage, & Pollock, 1990; Jonides, 2000). For example, Nakagawa (1994) investigated left and right hemisphere processing during visual Kanji character word recognition tasks. Real and unreal Kanji characters were displayed briefly either to the left or right of a centred position. Primes (antonyms, remote associates, unrelated, or neutral) were displayed briefly before target characters. For single Kanji characters there was a decided right hemisphere advantage. This contrasts with a similar study with English speakers involving English words, in which a left-hemisphere advantage was found (Nakagawa, 1991). The right hemisphere preference for Kanji is evidence that a fundamental difference exists between reading in orthographically divergent scripts and that different parts of the brain are utilized depending on whether the character is Kanji or a structure from an alphabetic script. The highly visual nature of Kanji determines a right-hemisphere preference. This study is consistent with Rusted's (1988) and Chen and Tsoi's (1990) findings that Chinese characters are closer aligned to visual processing than alphabetic script, such as English.

In a study similar to Nakagawa's (1994), Yamaguchi, Toyoda, Xu, Kobayashi, & Henik (2002) investigated the differences in hemispheric processing of Japanese Kanji and Kana. The Stroop paradigm was combined with Event-Related Potentials (ERPs).[3]Square patches of colour were presented with congruent or incongruent Kanji or Kana colour words superimposed on them, and the colour of the patch had to be named. Larger interference effects were found for stimuli presented in the left visual field (indicating processing in right hemisphere) for Kanji words, and in the right visual field (processing in the left hemisphere) for Kana words. ERP data supported this finding. It appears that Chinese characters are more closely associated with visual processing, as revealed in a right hemisphere advantage.

In a similar experiment, Hatta (1992) investigated the effect of Kanji attributes on visual field differences during three tasks, lexical decision and naming (both involving word/non-word decisions) and semantic classification (involving concrete/abstract decisions). Japanese monolinguals were presented with real and not-real Kanji characters, which were controlled for familiarity, concreteness, hieroglyphicity, stroke number and regularity, in either the left or right visual field. Hieroglyphicity was defined as a subjective impression about the similarity of a Kanji character and its representative real world object. Regularity was defined as the subjective interpretation of the level of geometric symmetry of Kanji characters. In naming and semantic classification, a significant left visual field advantage was found, indicating a right hemisphere processing bias for Kanji characters during these tasks. Kanji concreteness and hieroglyphicity also were highly correlated with each other. Therefore,

the right hemisphere preference of processing Kanji demonstrated could be attributed to imagery-related factors. This study is consistent with Nakagawa's (1994) findings that Kanji characters are processed in the right hemisphere.

There is much evidence to support the idea that words and pictures are processed in different parts of the brain (even though a large degree of topographic overlap has been detected) (e.g., Federmeier & Kutas, 2001). Topographic differences in brain activity in relation to processing different types of orthographies have also been found (e.g., Chen et al., 2002; Tan et al., 2001; Yamaguchi et al., 2002). For example, Tan et al. (2001) investigated the neural system associated with logographic reading using functional magnetic resonance imaging (fMRI).[4] In two tasks, participants from Mainland China were required to judge a pair of Chinese characters on their semantic and homophonic relatedness. Even though there was considerable topographic overlap with areas strongly associated with alphabetic reading, logographic reading peak activations were found in the middorsal prefrontal region, an area associated with the mediation of spatial and verbal working memory but one that few alphabetic reading fMRI studies highlighted. These distinct topographic regions activated by logographic reading may occur as a result of the visual-spatial complexity of logographic script.

In another fMRI study, Chen et al. (2002) investigated phonological and semantic aspects of pinyin and Chinese character processing. Pinyin is the representation of the Chinese language in English syllables (e.g., *ch, zh, ang* etc) and is taught to children in the first two months of school to facilitate the reading of Chinese characters (Siok & Fletcher, 2001). Mandarin native speakers had to identify written pairs of pinyin or Chinese characters as real words (depending on their sound). This task is possible because in Chinese there are many homophones, such that many Chinese character combinations can be formed which are nonsensical but have real word pronunciations. The assumption here was that, in order to determine whether the pinyin targets were real or not, the English letters would have to be assembled for the attainment of a pronunciation code. With the Chinese character combinations, the pronunciation code would be extracted without any assemblage of intraword particles. No significant hemispheric preference for either pinyin or Chinese characters was found but distinct activations in various brain sub-regions were detected that were different for pinyin and characters. This study provides further evidence that the orthographic and phonological aspects of the written word are subserved by anatomically different brain areas.

Furthermore, recent fMRI evidence has confirmed that not only do orthographically variant language learners' process their respective L1 scripts differently, but they transfer their L1 processing skills to L2 reading. For example, Nakada, Fuji, and Kwee (2001) asked English-Japanese bilinguals and Japanese-English bilinguals to read paragraphs of written text in English and in Japanese

(logographic Kanji). Even though the findings revealed a degree of topographic overlap in the activation of some regions for both Japanese and English language reading (e.g., in the left fusiform gyrus), distinct topographic brain regions were identified also. For L1 English reading, significantly greater levels of activation were found in the lingual gyri (LG) bilaterally for English-Japanese bilinguals, while activations flanking the left inferior temporal sulcus (ITS) occurred for Japanese-English readers reading Japanese. In terms of L2 reading, this pattern of activation was repeated. That is, the LG bilaterally was activated when the English-Japanese bilinguals read L2 Japanese and the area flanking the left ITS was activated when the Japanese-English bilinguals read L2 English. This finding provides convincing evidence that not only were Japanese and English readers processing their respective scripts in different topographic regions of the brain, they also were utilizing these same regions when processing a highly variant L2 script. This is strong evidence to support the theory of linguistic relativity. Moreover, the neuroanatomical findings of this study converges with a great deal of behavioural data; i.e., a number of cross-linguistic studies have established that L2 readers transfer specific L1 orthographic processing skills to L2 reading (e.g., Akamatsu, 2003; Chikamatsu, 1996; Koda, 1999, 2000; Mori, 1998; Muljani, Koda, & Moates, 1998).

In summary, it was established that there are important structural differences between logographic Chinese and alphabetic English orthographies. Evidence was presented that these orthographic differences may impact on the degree to which readers utilize orthographic or phonological processing skills. A general pattern was identified, with logographic Chinese readers utilizing more visually-orientated processing strategies and alphabetic English readers utilizing more phonologically-orientated processing strategies. A range of evidence from both cognitive psychology and neuroscience indicated that (1) logographic script is processed in different parts of the brain to alphabetic and syllabic scripts, (2) logographic script is more strongly associated with visual processing than alphabetic or syllabic script, (3) a logographic background may enhance visuo-spatial processing skills, and (4) L2 readers with an L1 logographic reading background process L2 English texts in the same brain regions associated with L1 logographic reading.

These main findings support the argument that the inculcation of a particular orthography can directly impact on cognitive processing, in accordance with Vygotskyan (1978, 1986) theory. That is, Chinese characters function as psychological tools, which once inculcated, transform higher level mental processing in various domains, such as reading, toward the concentration of orthographic (visual) processing (at least at word-identification level). In contrast, the inculcation of alphabetic languages such as English, result in a more phonologically-orientated processing bias. This claim supports linguistic relativity as a theory, which stipulates that the nature of language itself has the power to impact on cognitive processing.

Implications to Pedagogy

So, from a pedagogical perspective, what does all this mean for the classroom ESL (English as a Second Language) teacher with many native Chinese students? We know that reading in a second language is largely a matter of transferring L1 reading skills to L2 text. For example, there is growing evidence that language learners transfer their specific L1 orthographic processing skills to L2 processing (e.g., Akamatsu, 2003; Chikamatsu, 1996; Ehrich & Meuter, 2006; Koda, 1999, 2000; Mori, 1998; Muljani, et al., 1998). Furthermore, these studies have been confirmed neuroanatomically (e.g., Nakada, et al. 2001). Therefore, given that reading is a matter of L1 to L2 transfer, it is reasonable to assume that Chinese ESL students would transfer their L1 orthographic processing skills to reading English.

This idea is succinctly demonstrated in an interesting study by Akamatsu (2003). L1 logographic background readers (Chinese and Japanese) and L1 alphabetic background readers (Iranians) silently read short English passages of three levels of difficulty (easy, moderate, and hard). Half were presented in normal print and half were case altered (e.g., CaSe AlTeReD). The assumption here was that non-alphabetic background ESL learners, who rely more on orthographic factors in text processing (e.g., Chinese logographic readers), would perform worse on this task than their Iranian alphabetic reader counterparts. Results confirmed that logographic readers' reading times were significantly slower than those of alphabetic readers, supporting the notion that L1 orthographic background impacts on L2 reading.

Therefore, it would appear that when the Chinese reader processes alphabetic text, much attention is paid to the orthographic and visual form of the text, a direct result of their L1 orthographic processing background, whereby the importance of visual processing to attain lexis is greatly emphasized. So, how can this knowledge translate into effective pedagogy? Well, we know that after lexis is attained, the processes involved in Chinese reading tend to converge to homogeneity with English reading. That is, the role of phonology becomes more critical (see Feng et al., 2001). Therefore, it is likely that the visual versus phonological dichotomy proposed in this paper is only relevant at the word identification level. Hence, reading strategies should accommodate word level processing.

Importantly, the take home message here for English language teachers of reading to Chinese students is *awareness* that their students do come from a highly variant linguistic background and that they will transfer these variant (and at times, incompatible) L1 strategies to reading in English. Educators need to be aware that when a Chinese ESL student attempts to read English text, he or she will process this text in a cognitively different way from a student who has an orthographically variant L1 (e.g., alphabetic or syllabic background), at least at the word identification level.

One danger for English language teachers is to treat the psychological act of reading as something that all language learners perform in the same way, that is, as a uniform cognitive process that cuts across linguistic and cultural boundaries, regardless of a reader's L1 orthographic background. Indeed, this is the current thinking in terms of English language teacher (ELT) education (see Day & Bamford, 1998). ELT researchers, such as Day & Bamford tend to ignore the overwhelming evidence from both behavioural and neuroanatomical studies, indicating that variant orthographic systems are processed differently and that cognition is *not* uniform across all domains. The issue here is that if an ELT professional believes that everyone reads the same way then the one-size-fits-all mentality may be adopted in terms of reading pedagogy. It is essential that educators be aware of their students' linguistic background, and through such awareness, comes the development of teaching strategies appropriate to the specific needs of students. However, it is beyond the scope of this paper to recommend specific teaching strategies based on the arguments outlined here. That is a matter for future research.

Conclusion

This paper argued the case for linguistic relativity, as explained through Vygotskyan sociocultural theory. According to Vygotsky (1978, 1986), language and sign systems shape thought. Language, as a psychological tool, mediates the inner environment of the mind and changes it. From this premise, it follows that the inculcation of different language systems would result in different types of mental mediation. Therefore, the internalization of highly variant orthographic systems (e.g., logographic Chinese and alphabetic English) should invariably result in different types of cognition. Specifically, it was argued that cognitive processes associated with Chinese reading contrast with processes related to English alphabetic reading, suggesting a general dichotomy of visual versus phonological processing at the level of word identification. Importantly, behavioural and neuroanatomical evidence from Chinese and English reading studies supported this contention.

These ideas have two main implications for ESL teachers of reading to Chinese students, (1) as Chinese readers transfer their L1-specific reading skills to processing English text, problems may occur at the word level, and (2) teachers need to be aware that cognition in reading is not the same for all cultural groups and may have to adjust their pedagogy accordingly.

References

Akamatsu, N. (2003). The effects of first language orthographic features on second language reading in text. *Language Learning, 53*(2), 207 – 231.

Cenoz, J. (2000). Research on multilingual acquisition. In J. Cenoz & U. Jessner

(Eds.), *English in Europe: The acquisition of a third language* (pp. 39 – 53). Clevedon: Multilingual Matters Ltd.

Chen, H., Flores d'Arcais, G. B., & Cheung, S. (1995). Orthographic and phonological activation in recognizing Chinese characters. *Psychological Research, 58,* 144 – 153.

Chen, Y., Fu, S., Iversen, S. D., Smith, S. M., & Matthews, P. M. (2002). Testing for dual brain processing routes in reading: A direct contrast of Chinese character and pinyin reading using fMRI. *Journal of Cognitive Neuroscience, 14*(7), 1088 - 1098.

Chen, H. -C., & Tsoi, K. C. (1990). Symbol-word interference in Chinese and English. *Acta Psychologica, 75,* 123 – 138.

Chiarello, C., Burgess, C., Gage, L., & Pollock, A., (1990). Semantic and associative priming in the cerebral hemispheres: Some words do, some words don't…sometimes, some places. *Brain and Cognition, 38,* 75 – 104.

Chikamatsu, N. (1996). The effects of L1 orthography on L2 word recognition: A study of American and Chinese learners of Japanese. *Studies in Second Language Acquisition, 18*(4), 403 – 432.

Coltheart, M. (1980). Reading, phonological recoding and deep dyslexia. In M. Coltheart, K. Patterson, & J. C. Marshall (Eds.), *Deep dyslexia* (pp. 197 – 226). London: Routledge and Kegan Paul.

Coltheart, M., & Rastle, K. (1994). Serial processing in reading aloud: Evidence for dual-route models of reading. *Journal of Experimental Psychology: Human Perception and Performance, 20*(6), 1197 – 1211.

Coltheart, M., Rastle, K., Perry, C., Langdon, R., Ziegler, J. (2001). DRC: A dual route cascaded model of visual word recognition and reading aloud. *Psychological Review, 108*(1), 204 – 256.

Coltheart, V. (1999). Phonological codes in reading comprehension, short-term memory, and memory for rapid visual sequences. In V. Coltheart (Ed.), *Fleeting memories cognition of brief visual stimuli* (pp.181 – 225). Cambridge MA: The MIT Press

Daniels, H. (2001). *Vygotsky and pedagogy*. London: Routledge Falmer.

Damian, M. F., & Martin, R. C. (1998). Is visual lexical access based on phonological codes? Evidence from a picture-word interference task. *Psychonomic Bulletin and Review, 5*(1), 91 – 96.

Day, R. R., & Bamford, J. (1998). *Extensive reading in the second language classroom.* Cambridge: Harvard University Press.

De Guerrero, M.C.M. (1994). Form and functions of inner speech in adult second language learning. In J. P. Lantolf & G. Appel (Eds.), *Vygotskian approaches to second language research* (pp. 83 – 115). New Jersey: Ablex Publishing Corporation.

De Guerrero, M. C. M. (1999). Inner speech as mental rehearsal: The case of advanced L2 learners. *Issues in Applied Linguistics, 10*(1), 27 – 55.

Demetriou, A., Kui, Z. X., Spandoudis, G., Christou, C., Kyriakides, L., & Platsidou, M. (2005). The architecture, dynamics, and development of mental processing: Greek, Chinese, or Universal? *Intelligence, 33*, 109 – 141.

Ehrich, J. F., & Meuter, R. F. I. (2006). Acquiring an artificial logographic orthography: A comparison of logographic versus alphabetic L1 users. [Abstract]. *American Association of Applied Linguistics/ Canadian Association of Applied Linguistics Conference 2006*, Montreal, Canada, pp. 131.

Federmeier, K. D., & Kutas, M. (2001). Meaning and modality: Influences of context, semantic memory organization, and perceptual predictability on picture processing. *Journal of Experimental Psychology: Learning, Memory, and Cognition, 27*(1), 202 – 224.

Feng, G., Miller, K., Shu, H., & Zhang, H. (2001). Rowed to recovery: The use of
phonological and orthographic information in reading Chinese and English. *Journal of Experimental Psychology: Learning, Memory, and Cognition, 27*(4), 1079 - 1100.

Flaherty, M. (2000). Memory in the deaf: A cross-cultural study in English and Japanese. *American Annals of the Deaf, 145*(3), 237 – 245.

Flores d'Arcais, G. B., Saito, H., & Kawakami, M. (1995). Phonological and semantic activation in reading Kanji characters. *Journal of Experimental Psychology: Learning, Memory and Cognition, 21*(1), 34 - 42.

Gao, Y. J. (1983). Functions of phonetic radicals and other uses. *YuWen XuiXi (Language Studies), 9*, 53 – 55.

Grabe, W. (2002). Reading in a second language. In R. B. Kaplan (Ed.), *The Oxford handbook of applied linguistics* (pp. 49 – 59). Oxford: Oxford University Press.

Gumperz, J. J., & Levinson, S. C. (1996). Introduction to Part 1. In J. J. Gumperz & S. C. Levinson (Eds.), *Rethinking linguistic relativity* (pp. 21 – 36). Cambridge: Cambridge University Press.

Hanley, J. R., & Huang, H. S. (1997). Phonological awareness and learning to read Chinese. In C. K. Leong & R. Malatesha Joshi (Eds.), *Cross-language studies of learning to read and spell: Phonologic and orthographic processing* (pp. 361 – 379). Dordrecht: Kluwer Academic Publishers.

Hatta, T. (1992). The effects of kanji attributes on visual field differences: Examination with lexical decision, naming and semantic classification tasks. *Neuropsychologica*, *30*(4), 361 – 371.

Hoosain, R. (1991). *Psycholinguistic implications for linguistic relativity: A case study of Chinese.* Hillsdale, NJ: Erlbaum.

Hung, L. D., Tzeng, O. J. L., & Tzeng, A. K.Y. (1992). Automatic activation of linguistic information in Chinese character recognition. In R. Frost & L. Katz (Eds.), *Orthography, phonology, morphology, and meaning* (pp. 119 – 130). Amsterdam: Elsevier Science Publishers.

Jonides, J. (2000). Mechanisms of verbal working memory revealed by neuroimaging studies. In B. Landau, J. Sabini, J. Jonides, & E. Newport (Eds.), *Perception, cognition, and language: Essays in honor of Henry and Lila Gleitman* (pp. 87 – 105). Cambridge, Massachusetts: The MIT Press.

Ju, D., & Jackson, N. E. (1995). Graphic and phonological processing in Chinese character identification. *Journal of Reading Behavior, 27*(3), 299 - 313.

Katz, L., & Frost, R. (1992). The reading process is different for different orthographies: The orthographic depth hypothesis. In R. Frost & L. Katz (Eds.), *Orthography, phonology, morphology, and meaning* (pp. 67 – 84). Amsterdam: Elsevier Science Publishers.

Koda, K. (1999). Development of L2 intraword orthographic sensitivity and decoding skills. *The Modern Language Journal, 83*(1), 51 - 64.

Koda, K. (2000). Cross-linguistic variations in L2 morphological awareness. *Applied* Psycholinguistics, 21, 297 – 320.

Levinson, S. C. (1996). Relativity in spatial conception and description. In J. J. Gumperz & S. C. Levinson (Eds.), *Rethinking linguistic relativity* (pp. 177 – 202). Cambridge: Cambridge University Press.

Liberman, I. Y., Mann, V. A., Shankweiler, D., & Werfelman, M. (1982). Children's memory for recurring linguistic and non-linguistic material in relation to reading ability. *Cortex, 18*, 367 – 375.

Lucy, J. A. (1996). The scope of linguistic relativity: An analysis and review of empirical research. In J. J. Gumperz & S. C. Levinson (Eds.), *Rethinking linguistic relativity* (pp. 37 – 69). Cambridge: Cambridge University Press.

Mann, V. A. (1985). A cross-linguistic perspective on the relation between temporarymemory skills and early reading ability. *Remedial and Special Education, 6*, 37 – 42.

Mattingly, I. G. (1992). Linguistic awareness and orthographic form. In R. Frost & L. Katz (Eds.), *Orthography, phonology, morphology, and meaning* (pp. 11 – 26). Amsterdam: Elsevier Science Publishers.

Mori, Y. (1998). Effects of first language and phonological accessibility on Kanji recognition. *The Modern Language Journal*, *82*, 69 – 82.

Muljani, D., Koda, K., & Moates, D. (1998). The development of word recognition in a second language. *Applied Psycholinguistics, 19*, 99 – 113.

Nakada, T., Fujii, Y., & Kwee, I. L. (2001). Brain strategies for reading in the second language are determined by the first language. *Neuroscience Research, 40*, 351 – 358.

Nakagawa, A. (1991). Role of anterior and posterior attention in hemispheric asymmetries during lexical decisions. *Journal of Cognitive Neuroscience*, *3*, 313 – 321.

Nakagawa, A. (1994). Visual and semantic processing in reading Kanji. *Journal of Experimental Psychology: Human Perception and Performance, 20*(4), 864 - 875.

Patterson, K., & Coltheart, V. (1987). Phonological processing and reading. In M. Coltheart (Ed.), *Attention and performance twelve the psychology of reading* (pp. 421 – 449). Hove and London: Lawrence Erlbaum Associates.

Perfetti, C. A. (1999). Cognitive research and the misconceptions of reading education. In J. Oakhill & R. Beard (Eds.), *Reading development and the teaching of reading: A psychological perspective* (pp. 42 - 59). Oxford: Blackwell Publishers.

Perfetti, C. A., & Zhang, S. (1995). The universal word identification reflex. *The Psychology of Learning and Motivation, 33*, 159 – 198.

Pollatsek, A., Lesch, M., Morris, R. K., & Rayner, K. (1992). Phonological codes are used in integrating information across saccades in word identification and reading. *Journal of Experimental Psychology: Human Perception and Performance, 18*(1), 148 – 162.

Rusted, J. (1988). Orthographic effects for Chinese-English bilinguals in a picture-word interference task. *Current Psychology: Research and Reviews, 7*(3), 207 – 220.

Schinke–Llano, L. (1993). On the value of a Vygotskian framework for SLA theory research. *Language Learning, 43*(1), 121 – 129.

Seidenberg, M. S., & McClelland, J. L. (1989). A distributed, developmental model of word recognition and naming. *Psychological Review, 96*(4), 523 – 568.

Shen, D., & Forster, K. I. (1999). Masked phonological priming in reading Chinese words depends on the task. *Language and Cognitive Processes, 14*(5/6), 429 - 459.

Shu, H., Chen, X., Anderson, R. C., Wu N., & Xuan, Y. (2003). Properties of school Chinese: Implications for learning to read. *Child Development, 74*(1), 27 – 47.

Siok, W. T., & Fletcher, P. (2001). The role of phonological awareness and visual-orthographic skills in Chinese reading tasks. *Developmental Psychology, 37*(6), 886 – 899.

Stanovich, K. E. (2000). *Progress in understanding reading: Scientific foundations and new frontiers.* New York: The Guilford Press.

Stevenson, H. W., Stigler, J. W., Lee, S. Y., Lucker, G. W., Kitamura, S., & Hsu, C. (1985). Cognitive performance and academic achievement of Japanese, Chinese and American children. *Child Development, 56,* 718 – 734.

Stevenson, H. W., & Ying-Lee, S. (1990). Contexts of achievement: A study of American, Chinese and Japanese children. *Monographs of the Society for Research in Child Development, 55*(1 – 2), 1 -107.

Stigler, J. W., Chalip, L., & Miller, K. F. (1986). Consequences of skill: The case for abacus training in Taiwan. *American Journal of Education, 94*(4), 447 – 480.

Tamaoka, K., Saklofske, D. H., & Ide, M. (1993). The non-verbal reasoning ability of Japanese children measured by Naglieri's (1985) Matrix Analogies test-Short Form. *Psychologia, 36,* 53 – 60.

Tan, L. H., Hoosain, R., & Peng, D. (1995). Role of early presemantic phonological codes in Chinese identification. *Journal of Experimental Psychology: Learning, Memory and Cognition, 21*(1), 43 - 54.

Tan, L. H., Liu, H. L., Perfetti, C. A., Spinks, J. A., Fox, P. T., & Gao, J. H. (2001). The neural system underlying Chinese logograph reading. *NeuroImage, 13,* 836 – 846.

Tavasolli, N. T. (2002). Spatial memory for Chinese and English. *Journal of Cross-Cultural Psychology, 33*(4), 415 – 431.

Van der Veer, R., & J. Valsiner. (1991). *Understanding Vygotsky: A quest for synthesis.* Basil Blackwell Inc: Cambridge Massachusetts.

Vygotsky, L. S. (1978). *Mind in society: The development of higher psychological processes*. M. Cole, V. John-Steiner, S. Scribner, & E. Souberman (Eds.), Cambridge Massachusetts: Harvard University Press.

Vygotsky, L. S. (1986). *Thought and language*. A. Kozulin (Ed.), Cambridge, Massachusetts: The MIT Press.

Wong, K. F. E., & Chen, H. (1999). Orthographic and phonological processing in reading Chinese text: Evidence from eye fixations. *Language and Cognitive Processes, 14*(5/6), 461 - 480.

Yamaguchi, S., Toyoda, G., Xu, J., Kobayashi, S., & Henik, A. (2002). Electroencephalographic activity in a flanker interference task using Japanese orthography. *Journal of Cognitive Neuroscience, 14*(7), 971 - 979.

Zhou, X., & Marslen-Wilson, W. (1999). The nature of sublexical processing in reading Chinese characters. *Journal of Experimental Psychology, Learning, Memory and Cognition, 25*(4), 819 - 837.

Zhou, X., & Marslen-Wilson, W. (2000). The relative time course of semantic and phonological activation in reading Chinese. *Journal of Experimental Psychology: Learning, Memory and Cognition, 26*(5), 1245 - 1265.

Zhou, X., Marslen-Wilson, W., Taft, M., & Shu, H. (1999). Morphology, orthography, and phonology in reading Chinese compound words. *Language and Cognitive Processes, 14*(5/6), 525 - 565.

Footnotes

[1] By the term "Chinese characters" I am referring to both traditional (Taiwanese) and simplified (mainland Chinese) Chinese characters as well as Japanese Kanji, unless otherwise specified.

[2] Japanese writing consists of Chinese logographs (Kanji) and two syllabic scripts (Hirigana and Katakana). Because Japanese have a history of learning logographic Chinese characters they are categorised as logographic readers in this paper.

[3] A technique to measure electrical activity in the brain.

[4] A technique to capture images of the direction of blood flow in the brain.