University of Wollongong
Research Online

Coal Operators' Conference

Faculty of Engineering and Information Sciences

2012

Dust control practices in the Indian mining industry

Jai Krishna Pandey
CSIR-Central Institute of Mining and Fuel Research

Publication Details

J.K. Pandey, Dust control practices in the Indian mining industry, 12th Coal Operators' Conference University of Wollongong & the Australasian Institute of Mining and Metallurgy, 2012, 185-192

Research Online is the open access institutional repository for the University of Wollongong. For further information contact the UOW Library: research-pubs@uow.edu.au

DUST CONTROL PRACTICES IN THE INDIAN MINING INDUSTRY

Jai Krishna Pandey

ABSTRACT: Mining is a dust prone occupation and almost every major process in mining contributes to the atmospheric load of suspended particulate matter. Prolonged exposure of this dust is known to cause various respiratory diseases including deadly pneumoconiosis among the miners. The Central Institute of Mining and Fuel Research, Dhanbad has contributed significantly in the area of dust assessment and control. It has developed a few simple yet effective techniques for controlling dust in drilling, crusher houses, transfer points, and haul roads. These techniques of dust control are gaining industry interest in recent years mainly for two reasons: (a) dust generation has increased significantly due to higher mechanisation and the introduction of mass production technologies to meet our growing production needs making application of dust control mechanism inevitable, (b) growing consciousness of environment and stricter environmental compliance mechanisms has put constant pressure on the mining industry for regular use of dust control practices. The present paper briefly describes the techniques/methodologies for controlling dust during different drilling practices and at crusher house and conveyor transfer points and haul roads in the mining industry.

INTRODUCTION

Coal is a prime source of energy for India and it will continue to maintain its lead for the foreseeable future. Dust is an accepted fact for almost every operation in coal mining. Many processes can be pinpointed as contributions to dust generation like drilling, blasting, haul roads, coal cutting by continuous miner, conveyor belts and crusher houses. With an increased level of mechanisation and the pressing demand to boost production for minimising the supply gap, generation of air borne respirable dust is increasing necessitating more effective dust control practices. Being a labour intensive industry, coal mining warrants extra efforts to mitigate dust pollution.

Prolonged exposure of coal mine dust is known to cause various respiratory diseases like pneumoconiosis, silicosis, bronchitis, asthma, fibrosis of lungs and tuberculosis (TB), depending upon the nature of the dust. Free silica/quartz present in the dust of mine air has been identified as a main cause of these health hazards to miners. Indian coals are considered to be of 'drift' origin and therefore contain high mineral matter intermixed with coal matter. Quartz is one of the major minerals present in coal and therefore miners are exposed to health risks arising from inhalation of quartz laden coal dust generated in the coal mines (Nair and Sinha, 1988). Dust with quartz content of up to 14.49% has also been reported in coal mines of Bhart Coking Coal Limited, Dhanbad (Pandey, *et al.*, 2008). The health risk to the miners varies depending upon the nature of coal and its mineral content, condition of the mines, nature of job handled by the miner and finally the quality and the efficacy of the safety measures adopted by management.

Air-borne dust from mining activities spreads over nearby populated areas and crops causing harmful effects in many ways to the people, vegetation, forests, animals and water resources. The corrosive effect of the dust shortens the life of lubricants of Heavy Earth Moving Machinery (HEMM), increases maintenance costs and reduces its operating efficiency. The dust impedes visibility thereby reducing production capacity. It is also a potential safety hazard.

DUST CONTROL PRACTICES IN INDIAN COAL MINES

Dust control involves either dust consolidation or dust capture. Dust consolidation is normally practiced for settled dust which becomes airborne in favourable condition e.g. haul roads of open cast mines. Dust collection or capture is resorted to when it is airborne. In these cases dust is collected close to its source of generation for effective result and therefore the method is useful for controlling dust generated in localised spaces or point sources like drilling, blasting, crusher house and conveyor transfer points with the help of special types of dust capture arrangement. Dilution of dust is limited to small concentration of dust only. The Central Institute of Mining and Fuel Research (CIMFR) has made a significant contribution in this area and has demonstrated some very effective yet simple techniques for

CSIR-Central Institute of Mining and Fuel Research, Dhanbad, India, email: jaikrishna_p@yahoo.com

providing dust control in various situations which are described in the following sections. Few face operations including blasting do not permit efficient and cost effective dust control. Preventive steps like pattern of holes, quantity and strength of explosive and water stemming facilitate lower dust generation and are probably the better tools to overcome the problem.

Dust control in drilling

Drilling produces the largest quantity of respirable dust per unit weight during the shortest time. A study (Nair, *et al.*, 1999) reports up to 1.46 kg of respirable dust generation per meter of drilling by a 250 mm diameter drill in iron ore opencast mines. Table 1 (Sinha and Nair,1982) presents the level of dust generation during drilling in coal, limestone and iron ore which reveals that air borne dust generated in drilling increases with drill diameter and rock hardness. Analyses of dust collected from these drill holes reveals that the bulk of the drill hole dust (up to 65%) was above 500 micron in size, up to 12.2% was under 53 micron and up to 1% was in the respirable range.

Table 1 - Quantity of total dust generated from drill hole for coal, limestone and iron ore for different drill hole diameter

Diameter of drill hole (mm)	Amount of dust (kg) generated per meter of drilling		
	Coal	Limestone	Iron ore
60	3.7	7.8	12.7
100	10.2	21.5	35.5
150	23.0	48.6	79.5
200	40.9	86.4	144.5
250	63.75	134.9	220.7
300	91.92	194.5	318.2

Drilling is essential in mining and large quantities of dust will be produced irrespective of the method of drilling. Therefore, various methods of dust suppression will have to be introduced to bring down the concentration of dust to safe limit. The principal dust suppression methods are wet drilling, suppression by fog and dry dust collection.

The wet drilling method is based on the introduction of water into the hole being drilled, through the centre of drill steel. But it has not yet been possible to establish the relationship between the dust collecting capacity and the shape and size of the bit or even the number of outlet holes for the water (Parmeggiani, 1983). However, water has poor efficiency for collection of respirable dust (Sen and Ghosh, 1985). Water adds to the risk of jamming of the drill bit inside the drill hole, and reduces the rate of drillling. In underground mines, water added for drilling creates foggy situations, which lead to poor visibility. Addition of small amount of soluble oil (0.1-3%) creates an emulsion which reduces surface tension of the water and may improve the performance and extends the life of the bit. Many studies have shown that the addition of wetting agents to the circulating water is expensive with relatively little effect on fine dust collection.

Besides economics and efficiency, the situation may also arise where wet drilling is undesirable either because the machines become clogged, or because the spray and fog released by the machine may affect nearby electrical installations or create undesirable conditions for the operator drilling vertical overhead holes. There may also be workplaces that are not equipped with a water supply. Dry dust collection is therefore more common. The conventional practice of dry dust collection is energy consuming and not effective. CIMFR has developed few dry dust collection systems for the prevalent form of drilling practices used in Indian mines. The advantages of the CIMFR designs are:

- The dust collectors are portable and easy to use;
- They do not use any source of energy for operation – no water, electricity or anything else;
- They do not affect the rate of drilling, rather than improve on it by avoiding jamming and energy waste;
- Collection efficiency is very high;

- No moving parts, therefore, no wear and tear only some inexpensive washers need replacement;
- The dust collectors are easily fabricated by small scale units;
- Operators do not require any special training for their use. Even unskilled labour can use them;
- The dust collectors are inexpensive.

Dust extractor for jack hammer drilling

The dust extractor (Nair, *et al*., 1999; Nair and Sinha, 1984) is comprised of a hood with a cushion base, an elastic collar attachment to cope with intermittent hammer motion and an elastic collar grip on the drill rod to prevent air leakage to atmosphere. A collared base plate is added to the bottom of the hood above the cushion base. A long filter bag is attached to the funnel opening. A foot pedal ensures firm grip of the device to the ground during drilling. The arrangement of the dust extractor is shown schematically in Figure 1.

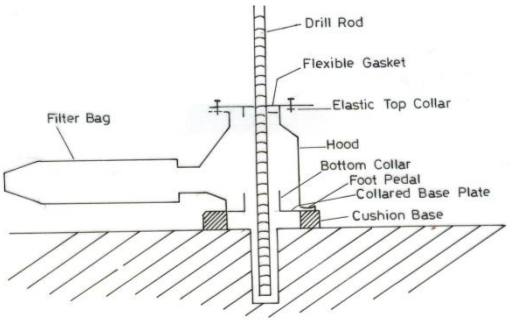

Figure 1 - Dust extractor for jack hammer drill (not to Scale)

The jack hammer drill rod passes through the elastic collar, and through the base plate collar. The elastic top collar provides a leak proof grip on the drill rod, and yet it lets the rod move up and down during hammer action. The flexible gasket too permits free hammer motion without leakage. The base collar does not allow dust to fall back to the drill hole. During drilling, the cuttings are transported to the hood by the scavenging compressed air, which eventually gets channelled through the filter bag. The bag lets the air go out and retains all the dust. This gives collection efficiency (Table 2) of about 90%. The dust collection process is dry. No dust is allowed to fall back to the drill hole. For this reason use of the device improves on the rate of drilling. The device is ideal for secondary drilling as well as horizontal drilling in underground mines.

Table 2 - Result of Air borne respirable dust concentration in rock drilling by jack hammer drills of 33 mm diameter with and without dust extractor

Operation	Drilling without extractor in ppcc*	Drilling with extractor in ppcc*	Dust collection efficiency %
Before drilling	200		
During 1st hole drilling	2720	440	83.82%
During 2nd hole drilling	3973	436	89.03%
During 3rd hole drilling	5695	659	88.42%

*particles per cubic centimetre

Dust extractor for electric rotary drilling

Electric rotary drilling is very common in underground mine where several such holes are drilled every day. This generates about 42 g of respirable dust per minute (Sinha and Nair, 1982) which cannot viably be diluted to safe limits. The dust extractor (Nair, *et al.*, 1999) designed for electric rotary drilling is shown schematically in Figure 2.

The extractor weighing about 1.25 kg is comprised of a hood and a wide cushioned base, a narrow collared mouth, and a funnel shaped dust outlet to the side of the hood. A long collector bag is

attached to the funnel. A handle holds the hood on its foam base to the vertical coal strata while the bag hangs to the ground from the funnel end. During drilling, the drill rod passes through the mouth of the hood, and through the base till it meets the coal to be drilled. The design of hood takes into account the lateral throw of the dust during drilling. Forward motion of the drill and the gravitational fall of dust down the bag creates negative pressure within the hood which prevents dust heat through its mouth. The cushion base firmly resists leakage between coal and hood. All these result in nearly 100% dust collection.

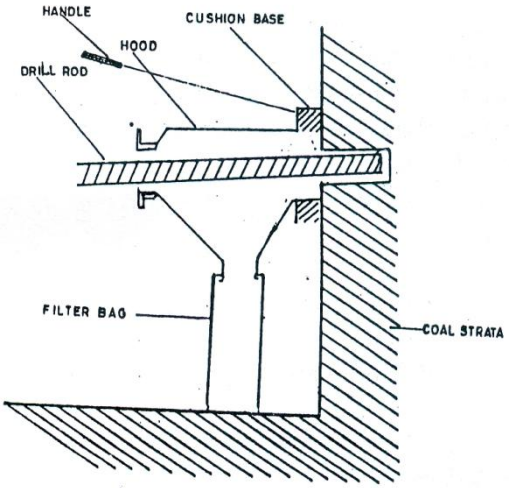

Figure 2 - Dust extractor for electric rotary drill (not to Scale)

Dust collector for drilling in mine roof

This is basically a light weight (less than 2 kg) portable dust collector (Nair, *et al.*, 1999) explained schematically in Figure 3. It consists of a cushion base, collared disc with spring action handle. A long collector bag hangs from the collar. A port of entry for the drill rod is provided in the collector bag, the mouth of this opening is stiffened and is provided with ring gaskets. During drilling the cushioned disc is placed against the roof and supported by a handle. The drill rod is allowed through the hole in the bag, till it touches the roof. The bag is flexible enough to permit drilling for vertical holes or inclined holes. The hanging bag is positioned along the handle so as to avoid obstruction to the drilling process. The collector permits collection of about 90% the dust.

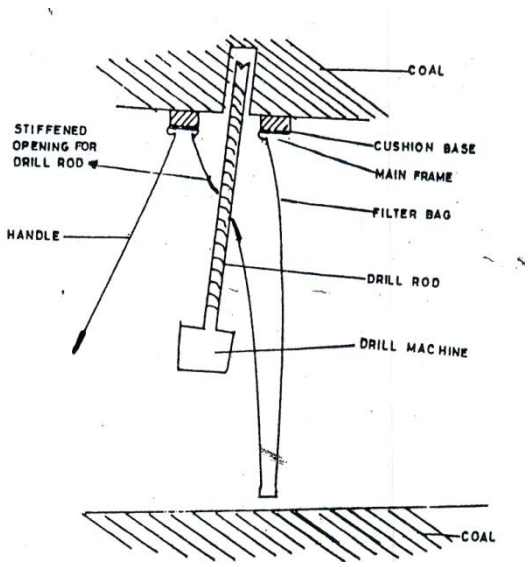

Figure 3 - Dust collector for drilling in mine roof (not to Scale)

Dust arrester for large diameter deep hole drilling in open pit mines

Up to a few hundred kilograms of broken dust is generated from each drill hole. The dust is finer than what is formed in other mining operations and contains a significant proportion of respirable dust. Normally this dust is flushed out from the drill hole by a few cubic meters of compressed air, at high velocity. This dusty air loses its kinetic energy upon reaching the surface, and a dust cloud is formed around the drill. The energy which is wasted in polluting the environment is put to use in the CIMFR designed Dust Arrester (Nair and Sinha, 1987) to clean the air of its own dust.

The dust arrester is a rectangular box with a ring shaped foam cushion washer at the top, a collar base plate with a cushioned bottom, and a large opening on one side to which a specially shaped long and tough filter bag is attached. Figure 4 explains the design of the dust arrester schematically. For dust collection, drilling is carried out through this device. The box is placed on its cushion base at the selected site. The drill rod is introduced through the top ring cushion and through the base plate collar till the drill rod touches the ore body. The dust filter bag is fully stretched. The hole in the ring cushion is smaller than that of drill rod, but flexible enough to let the larger drill bit pass through. This ensures an airtight grip between the drill rod, and the ring cushion yet permit free rotation of the rod. During drilling, part of coarse dust gets deposited around the base collar and fines pass through the filter bag. The base cushion gets pressed against coal strata due to the weight of dust settling inside the box, thereby preventing leakage of air at its base.

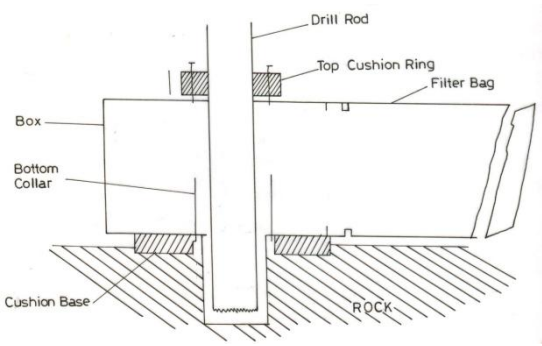

Figure 4 - Dust arrester for large diameter deep hole drilling (not to Scale)

Thus, the cushion at the top surrounding the drill rod and the cushion at its base together make the extractor an air tight unit, and therefore, dusty air from drill hole moves on its own towards filter bag for dust collection. The large surface area of the filter bag permits slow filtration of dusty air through its pores. Table 3 and Table 4 present the performance study of the dust arrester in stone and iron ore. The current design is ideally suited for drills of diameter up to 120 mm. A modified version is under consideration for larger diameter drills. The total weight of the box is about 5 to 6 kg only and that of bag another 3 to 4 kg.

Table 3 - Air-borne dust concentration measured during drilling in stone with and without dust arrestor using 150 mm drill master drilling machine

Time measured from start of drilling	Drilling with dust arrestor (ppcc)	Drilling without dust arrestor (ppcc)
1 minute	160	1998
5 minute	177	3000
10 minute	220	4940
15 minute	230	8053
Average	198	4650
Reduction in respirable dust	95.7%	

Dust control at crusher house and transfer points

A significant amount of dust is generated at crusher houses and transfer points in the coal mines. CIMFR, Dhanbad has given a concept of the Canopy Curtain Method (Pandey, *et al.,* 2001) for collecting dust at dust generating point sources like coal unloading bunkers, crushers, screening points and conveyor transfer points with dust collection efficiency of more than 80%. The technique involves dust collection at start point. It essentially requires filter cloth to make an appropriate enclosure at the

dust generating point. Porosity of the cloth enables it to take advantage of the natural wind. The enclosure has to be of sufficiently large size so that the up thrust velocity of dust generated due to impact of coal diminishes out. The dust will then be permitted to stick to the walls of the enclosure or escape through the chimney by the action of the normal air current, diffusion or otherwise. The enclosure has to be kept wet by capillary action or by wetting the canvas with the water drops from the top or a combination of both for a better and more effective result. A wire net framework will be required to keep cloth enclosure in order. A small exhaust fan can be fitted in the chimney to further improve the dust collection efficiency. A laboratory experiment was designed to assess the efficacy of the techniques. Dust collection efficiency obtained in conducted a six set of experiments varied between 76-94%. It is more for silica or stone dust as compared to coal dust. It has been found that wetting the canopy significantly improves the dust collection efficiency.

Table 4 - Air-borne respirable dust (ARD) concentration measured during drilling in iron ore with and without dust arrester using 150 mm drill master drilling machine

Time in minute measured from start of drilling	Drilling with dust arrestor (ppcc)	Drilling without dust arrestor (ppcc)	Drilling with dust arrestor (ppcc)	Drilling without dust arrestor (ppcc)
Before drilling started	80	53	95	105
1 minute	143	8 040	105	100 000
5 minute	143	15 860	240	113 000
10 minute	139	16 950	120	80 000
15 minute	120	16 950	120	80 000
20 minute	280	3 120	144	429 000
25 minute	240	5 990	265	71 770
30 minute	213	2 770	280	48 720
Average	183	9 442	188	71 327
Percentage reduction of ARD	98.1%		99.8%	

Dust control in haul roads

Unpaved haul roads in coal mines are a veritable source of dust pollution supporting normally 10 to 15 mm of dust on its surface (Pandey, *et al.*, 1999). Dust from haul roads gets lifted and floats in the air during movement of trucks and forms a dust cloud. With an increase in the weight of trucks, speed and frequency of traffic, the cloud may appear to be continuous causing delays and difficulties. During continuous dumper runs, dust loads of surrounding atmosphere builds up both vertically and horizontally. Application of water at frequent intervals, remained by far the most practical solution for the control of dust on haul roads. Water applied in the conventional way gets dried up fast, and its replenishment at frequent intervals (up to 15 times a shift) becomes necessary for effective dust control which adds significant cost. In a case of Block II, Opencast Project of Bharat Coking Coal Limited (BCCL), water spraying over a 3 km long, 20 m wide haul road cost Rs 25 000 over a period of one year (Pandey, *et al.*, 1999). It becomes more cumbersome and costly where water is not easily available. Unfortunately water becomes a scare resource in summer when it is required most. Besides, water has a poor wetting ability for coal. Therefore instead of penetrating into the dust and consolidating it, it flows down the sloppy road and make it muddy. A number of techniques have been adopted addressing these issues which includes application of hygroscopic chemicals like calcium/magnesium to increase water retentivity. These chemicals require repeated application as they are re-dissolved in subsequent water sprays and tend to drain out to lower levels in the usually sloppy mines, adding to cost of treatment. Spray with oil-water emulsion also helps to consolidate dust but it does not penetrate deep and underlying dry dust layers gets airborne quickly during dumper movement. Some surface crusting agents like cohrex have also been tried which may need weekly or daily application. CIMFR, Dhanbad has contributed the following environment friendly and techno-economically viable methodologies for controlling dust in unpaved mine haul roads:

- Wet encrustation using super absorbent chemicals which can absorb, retain and reabsorb water several times, its weight without getting dissolved. The methodology involves mixing of the chemical with road dust and application of the water. It helps in very effective water management by increasing the water retaining capacity of road dust and in the process consolidates the dust and conserves water. This chemical is not known to have any environmental ill effects. Poor chemical absorbed water is not squeezed out under the

compressive force of tyres, the bondage being at molecular level. Poor solubility of the chemical increases the effective span of the treatment cycle to several months. In the case study of Block II Opencast project of BCCL it could result in a saving of about 45% over the water spraying. (Pandey, *et al.*, 1999)

- To avoid water wastage and improving the economic viability of water spraying, it has also been proposed to selectively wet the road surface close to the tyre/road surface contact plane, before tyre to surface contact occurs, which can effectively eliminate dust emission from haul roads with far less spray of water. This can be achieved by designing a system to spray an adequate quantity of water ahead of the front tyre in each dumper. The system should be wide enough to match back wheel width and should preferably be fitted with inwardly facing sprays (Nair, *et al.*, 2001).
- Chemical dust suppressants are nowadays gaining more acceptance in the industry for controlling dust at haul roads probably due to the fact that the application methodology for these chemical dust suppressants fits well to the conventional water spraying. Keeping in view their industry acceptance, Director General of Mines Safety has also issued circulars for ensuring environmental safety and hazard issues. One such chemical, Dustron PC Coal has been developed by Syntron Industries, Ahmadabad in collaboration with CIMFR, Dhanbad. The product is non toxic, biodegradable, meets all the safety standards as per statutory requirement and has been proved to be very effective in controlling dust at haul road (Trivedi and Kumar, 2011).
- Dustron PC Coal is poured into the conventional water spraying container in recommended dilution and sprayed on the haul road surface in a conventional way. It improves water penetration, water retention, agglomeration of dust and reduces the water consumption of dust with improved dust control. Syntron Industries has conducted a number of studies for dust control with the help of Dustron PC used in mines haul road. The results of these studies conducted at various coal and metal mines vis-a-vis conventional water treatment with respect to various parameter on these haul roads are being summarised in the following six tables. These studies (Trivedi and Kumar, 2011) reveals the significant improvement in water conservation on mine haul roads, including:

    1. Water requirement decreases by more than 50% and a commensurate reduction in diesel consumption for running of water tanker. Moisture of haul roads are increased three fold in comparison to normal watering.
    2. Sieve test analysis of haul road dust with chemical and with water alone reveals that application of chemical improves agglomeration conditions as fines (size 0.5 mm or less) have been reduced after application of chemical by 80%.

CONCLUSION AND RECOMMENDATIONS

CIMFR, Dhanbad has made a number of significant contributions to fight the menace of dust in mining operations. Most of these are very simple and effective in controlling the dust generated due to various mining operations. But their potential has not been optimally utilised as dust control largely remained limited to convention as water spraying and wet drilling. In the wake of the mechanisation and developmental need of the country, the mining operation has made a quantum jump which has significantly increased the dust generation level. This, coupled with growing consciousness for environmental and health hazards, and stricter environmental compliance mechanism is virtually forcing mining operations to use dust control mechanisms with dust prone operations, the industry is now looking for techno-economically viable dust control solutions. Accordingly most of these have started gaining acceptance of the mining industry. Dust collectors described for various types of drilling operation provides inexpensive and easy to use methods with high performance efficiency. Dust suppressing chemical is a very convenient, cost effective solution for unpaved haul road dust consolidation. A canopy curtain method definitely deserves a trial for transfer points particularly crusher houses. Mass production technologies like longwall, highwall and continuous miners are also coming up in India which has a larger dust generation potential than conventional method of working. Adding dust suppressing chemicals in water jet spraying at cutting faces for improving wettability will significantly reduce the dust generation.

ACKNOWLEDGEMENTS

The author is thankful to Director, CSIR-CIMFR, Dhanbad for his kind permission to present the paper for the conference.

REFERENCES

Nair, P K, Pandey, J K and Gupta, M L, 1999. Control of dust in drilling - some CMRI initiatives, *International Symposium on Clean Coal Initiatives*, New Delhi, pp 627-632.

Nair, P K and Sinha, J K, 1987. Dust control at deep hole drilling for open pit mines, development of a dust arrester, *Journal of Mines, Metals and Fuels*, Aug 1987.

Nair, P K, Pandey, J K, Kumar, A and Gupta, M L, 2001. *Dust in Mine Environment, Mine Ventilation, Safety and Environment*, Ed. M.L Gupta, J K Pandey and Anjanee Kumar, New Academy Publishers, Delhi, pp 491-496.

Nair, P K and Sinha, J K, 1984. Dust extraction - a safety device, *Indian Journal of Environmental Protection*, Vol.4, No.3, pp128-132.

Nair, P K and Sinha, J K, 1988, Dust, coal workers' pneumoconiosis and some control measures, *Indian Journal of Environmental Protection*, Vol. 8, No.4, April 1988 pp 279-286.

Parmeggiani, L, 1983. *Encyclopedia of Occupational Health and Safety*, Third Edition, ILO,Geneva, Vol.1 pp 670-672.

Pandey, J K, Kumar, A and Gupta, M L, 2001. Laboratory scale experimental trial to control dust at source, Proc. *National Seminar on Mine Ventilation, Safety and Environment*, Dhanbad, 29-30 Nov., pp 469-475.

Pandey, J K, Nair, P K and Gupta, M L, 1999. A new technique for haul road dust consolidation - an evaluation of few case studies, *International Symposium on Clean Coal Initiatives*, New Delhi, pp 403-408.

Pandey, J K, Sen, Raja, Mondal, P C, Srivastava, S K and Palroy, P, 2008. Determination of air borne respirable dust concentration and free silica content at x seam bench of 6/10 OCP, *Mudidih Colliery, BCCL, CIMFR Dhanbad Study report No. SI/MS/42/2007-2008*.

Sen, D and Ghosh, G S,1985. Introduction to down - the - hole - drilling at Indian Copper Complex Mines, *Trans. MGMI*, Vol82, No.1, April 1985.

Sinha, J K and Nair, P K, 1982. Dust arrestor: a novel safety device, in *Proceedings of All India Seminar on Air Pollution*, Indore 19-21 April, pp.294-314.

Trivedi, S M and Kumar, Ajay, 2011. Dust suppression of mine haul road: few case studies, in *Proceedings of All India Seminar on Advances in Mine Production and Safety*, 26-27 Aug., CIMFR, Dhanbad, pp 239-246.