University of Wollongong
Research Online

Coal Operators' Conference

Faculty of Engineering and Information Sciences

2012

Desinging coal mine development galleries for room and pillar mining for continuous miner operations - Indian experience

Mani Ram Saharan
National Geotechnical Facility

Prabir Kumar Palit
Directorate General of Mines Safety

Kasaraneni Ramachandra Rao
SMS Infrastructure Ltd

Publication Details

M. R. Saharan, P.K. Palit and K.R. Rao, Designing coal mine development galleries for room and pillar mining for continuous miner operations - Indian experience, 12th Coal Operators' Conference, University of Wollongong & the Australasian Institute of Mining and Metallurgy, 2012, 154-162.

Research Online is the open access institutional repository for the University of Wollongong. For further information contact the UOW Library: research-pubs@uow.edu.au

DESIGNING COAL MINE DEVELOPMENT GALLERIES FOR ROOM AND PILLAR MINING FOR CONTINUOUS MINER OPERATIONS - INDIAN EXPERIENCE

Mani Ram Saharan[1], Prabir Kumar Palit[2] and Kasaraneni Ramachandra Rao[3]

ABSTRACT: Most of the about 300 underground coal mines in India operate with room and pillar mining method using drill and blast cyclic operations. Output per man shift from these mines has been stagnant since decades and a cause of concern. Introduction of continuous miner technology, though it works for 10% of its cycle time, is considered as an appropriate technology to boost productivity from already developed coal mining properties. This paper briefly describes Indian experience with using the continuous miner technology in a few of its mines. The paper also projects geo-technical conditions for the mines planned to use this technology. A case study is explained for geotechnical aspects of designing development galleries of a coal mine. The design procedure includes empirical rock mass characterisation, performance appraisal of the proposed roof support system, geotechnical instrumentation to characterise roof rock behaviour and numerical modelling for designing the operations.

INTRODUCTION

Energy sector demand for India is rising at a pace of 10-12% per annum. At present the coal sector is contributing more than 55 % of the energy demands for the country. It is projected that the national demand will reach 731 million tonnes in 2011-12 whereas the domestic supply will have to be stretched to 680 million tonnes to meet the energy requirements of the country. A major thrust for capacity creation in the nationalised coal sector has been implemented to achieve 680 million tonnes of coal production during terminal year XI th plan. As far as underground is concerned, infusion of modern technology power support longwall working, continuous miners, mechanisation of support system has been envisaged. The Continuous Miner (CM) is considered as the most appropriate intermediate technology.

The efficiency of coal production from underground coal mines is evaluated with Output per Man Shift (OMS) in coal engineering parlance and OMS from Indian underground mines has been stagnant at around one for a long. This OMS figure is considerably lower in comparison to other countries where OMS of more than 20 is a normal figure. The low figure of OMS from Indian coal mines is due to the fact that the mines are operating with work force intensive technology with drill and blast cyclic operations.

Mass production technology using CM is one of the suitable alternatives for Indian coal mines in order to efficiently boost the coal production from underground mines. The scenario of a higher production share from surface mines is not going to be sustainable because of reduced near surface coal reserves and other concerning issues attached with surface mining. Considering these restrictions the two state owned coal companies, Coal India Limited (CIL) and Singareni Collieries Company Limited (SCCL), have taken a lead to boost the coal production from underground mines through CM mining technology. At present five mines under different geo-mining conditions are extracting coal from previously developed square pillars with CM technology and the majority of them experienced unexpected roof fall incidents perhaps due the geo-mining conditions that were not appropriately anticipated and accounted during the planning stage. Four of the mines are using the pocket-and-fender method for coal extraction which is the least favoured method with CM technology due to safety reasons (Mark, *et al*., 2002). Five mines are developing coal blocks using CM technology. Three of the mines introduced CMs with a cutting drum width of 3.3 m and two have cutting drum widths of 2.7 m. This means that for economical reasons two mines shall operate with 5.4 m wide rooms and rest of the mines operate with 6.6 m room width. OMS from all these mines has shown a threefold to tenfold increase in comparison

[1] *National Geotechnical Facility (NGF), India*
[2] *Directorate General of Mines Safety (DGMS), India*
[3] *SMS Infrastructure Limited (SMSIL), India*

to the conventional mining practices and there is potential to further increase productivity from these mines should proper geotechnical planning be considered for the final extraction program.

INDIAN EXPERIENCE WITH CONTINUOUS MINER TECHNOLOGY FOR CREATION OF ROOMS IN ROOM AND PILLAR MINING

There are five mines, namely - GDK11, Tandsi, Kumbharkhani, Rani Atari and Chirimiri, operating with continuous miner technology in India where creations of rooms is being undertaken. Additionally, the Western Coalfields Limited (WCL) will implement continuous miner technology at its more underground (UG) mines apart from the operating two mines of Tandsi and Kumbharkhani in two phases. The mines are indicated in Table 1. The new method is more machine-oriented than the conventional mining method involving drill and blast cycles. Two of the operating mines have CMs with cutting drum width as 2.7 m implying that economic reasons dictates room width shall be at least 5.4 m while the other three mines have CM cutting drum width at 3.3 m giving the possibility for 6.6 m wide rooms. Geo-technical conditions dictating the room width can easily be ascertained by the stand-up time concept given by Bienawski (Bieniawski, 1976). Figure 1 illustrates the stand-up time concept with Rock Mass Rating (RMR) values plotted on it for some of the operating mines and planned mines. The statutory permitted room width for Rani Atari and Kumbharkhani mine is 5.4 m while Tandsi Mine is forced to work under 4.5 m room width due to poor geo-technical conditions. Chirimiri and GDK11 mine are permitted for 6 m wide room creation. Study from Figure 1 reveals that the decision to introduce CM with 3.3 m wide cutting drum for Tandsi mine was not a proper decision. The mine has a severe issue of ground control related problems caused by high horizontal stresses and a solution to deal with the stress regime should be addressed along with the creation of rooms. A proper study prior to introducing the CM technology would have helped the mine management. Figure 1 also suggests that the room widths of more than 6 m with a cut-out distance of 12 m can easily be operable parameters for the planned mines except the Nand I Mine. Rani Atari and Kumbharkhani mine has developed more than 20 km of development in the respective mines without an incident related to roof fall and both the mines used the stand-up concept to design the room width. The concept dictates that the maximum room width shall be designed in such a manner that the roof shall not fall within a period of 48 h prior to installation of the rock reinforcement measures. The critical time period of 48 h is kept in case the reinforcement measures could not be applied due to some technical problems in the mine.

Table 1 - Mines of WCL approved for continuous miner technology adoption

No	Mine	Mining Area	Operating/ Future Project	Remarks
1	Saoner No I	Nagpur	Operating	1st Phase
2	Maori	Kanhan	Operating	1st Phase
3	Tawa II	Pathakhera	Operating	2nd Phase
4	Nandan–II	Kanhan	Future	2nd Phase
5	Dhankasa	Pench	Future	2nd Phase
6	Jamunia	Pench	Future	2nd Phase
7	Nand – I	Umrer	Future	-

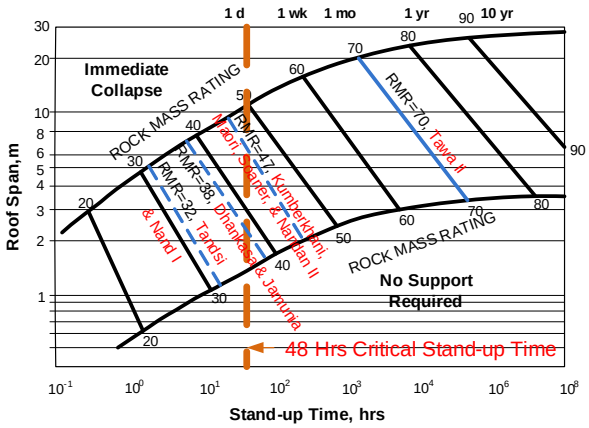

Figure 1 - Application of Bieniawski's RMR for room width/cut-out distance estimation

DESIGN OF ROOMS FOR ROOM AND PILLAR MINING - A CASE STUDY

Details of the mine

The mining area is covered by Survey of India Topo Sheet No. 64 J/5 (R.F. 1:50000). The coal reserve is known as the Vijay West Block and it is situated in the western part of Sendugarh Coalfields. The winnable reserve of Seam I, which is 11.30 Million Metric Tonnee, is grouped in four blocks based on their respective thickness of < 2.0 m, 2.0 m-2.5 m, 2.5 m-3.0m and >3.0m excluding the area under the 15 m hard cover statutory mining line, respectively. The coal block has the seam thickness varying between 2.0 m to 3.0 m with an average depth of 40 m from the surface. The seam is overlain by competent medium grained sandstone of varying thickness of Barakar Formation. Medium grained sandstone to shaly sandstone constitutes the seam floor in the mine. The coal seam before the experimental block is developed along the seam floor using room-and-pillar mining method with blasting-off-the-solid excavation technology in 4.2 m wide room dimensions and square pillars of 21 m centre to centre. The changing placement method of coal development with the CM technology is proposed for the development of the experimental coal block with 21 m square coal pillars (centre-to-centre) for room-and-pillar mining operations. The pillar size is based on Coal Mine Regulations those framed with considerations of drill and blast cyclic operations.

Authors of this paper are of opinion that smaller and rectangular pillars shall be preferred for CM technology to devise safer final extraction methods. Major design needs for the proposed method are namely, (a) a suitable room width, (b) a safe cut-out distance under which the machine can work for a limited time period without supports and (c) an effective roof rock reinforcement system for the development headings.

Geotechnical parameters and rock mass characterisation

Basic and applied geotechnical parameters for different coal measure rocks and coal has been obtained through field measurements and laboratory testing. The basic parameters include density, Young's modulus, Poisson's ratio, uniaxial compressive strength and sound wave velocities for different rocks. Core samples are obtained from the mine for the purposes. Applied geotechnical parameters, such as, joints persistence, joint conditions, number of joints, joint spacing and water seepage have been estimated through field measurements. These parameters are used for rock mass characterization and numerical modelling.

The basic geotechnical parameters are summarized in Table 2. Measured density of coal, fine grained sandstone and coarse grained sandstone is found as 1.29 t/m^3, 2.23 t/m^3 and 1.78 t/m^3, respectively. The first cycle slake durability index values of 97% for coal and 93% for fine grained sandstone, 93% for medium grained sandstone and 83% for coarse grained sandstone are measured. The UCS values are obtained through Point Load Index testing on core samples following guidelines by International Society for Rock Mechanics (ISRM, 1985) and Bureau of Indian Standards (BIS:8764, 2003). The core samples are tested for diametral and axial strengths; UCS values for fine grained sandstone, medium grained sandstone and coarse grained sandstone are obtained as 22.6 MPa, 16.3 MPa and 9.0 MPa, respectively. P-wave values are also obtained for the samples in order to indirectly assess the rock strength following the suggested procedure by International Society for Rock Mechanics (ISRM, 1978). The average P-wave velocities for fine grained sandstone, medium grained sandstone, coarse grained sandstone and coal samples along the axial direction are obtained as 1.44 km/s, 1.73 km/s, 2.25 km/s and 0.40 km/s, respectively. Estimated values for Young's Modulus for coal, fine grained sandstone, medium grained sandstone and coarse grained sandstone are 4 GPa, 4 GPa, 7 GPa and 2 GPa, respectively. Estimated values of Poisson's ratio for coal, fine grained sandstone, medium grained sandstone and coarse grained sandstone are 0.27, 0.41, 0.31 and 0.43, respectively. Bedding is the only joint found in all categories of sandstones. These joints are found tight, devoid of infillings, persistent with a joint spacing of 0.3 m to 0.7 m for both fine grained and medium grained sandstone while the joint spacing in coarse grained sandstone found to be 0.6 m to 0.9 m. Coal has two more joint sets apart from its cleats. The average spacing of cleats in coal is varying between 0.1 m to 0.15 m. Water seepage in the mine has been found below 20 ml/min.

Rock mass characterisation for coal and coal measure rocks of the mine has been done by using Geomechanics classification of Coal Measure Rocks (Coal Mine RMR by CMRI; CMRI, 1987), Bieniawski's RMR (Bieniawski, 1976) and NIOSH's Coal Mine Roof Rating CMRR (Molinda and Mark, 1993). These rock mass characterisation parameters are utilized for prediction of different geomining

conditions for the proposed continuous miner operations in the mine. Ratings for CMRR approach of rock mass characterisation is summarised in Table 3.

Table 2 - Engineering properties of coal measure rocks

Rock Type	Engineering Property	Mean Value of the Property	Remarks
Coal	Mass Density, kg/m^3	1290	Tested value
	First Cycle Slake Durability Index	97%	Tested value
	Young's Modulus, GPa	4	Estimated
	Poisson's Ratio	0.27	Estimated
	UCS, MPa	28.5	Tested value
Fine Grained Sandstone/ Shaly Sandstone	Mass Density, kg/m^3	2230	Tested value
	Young's Modulus, GPa	4	Estimated
	Poisson's Ratio	0.41	Estimated
	First Cycle Slake Durability Index	93%	Tested value
	UCS, MPa	22.6	Tested value
Medium Grained Sandstone	Mass Density, kg/m^3	2230	Tested value
	Young's Modulus, GPa	1	Estimated
	Poisson's Ratio	0.31	Estimated
	First Cycle Slake Durability Index	93%	Tested value
	UCS, MPa	16.3	Tested value
Coarse Grained Sandstone	Mass Density, kg/m^3	1780	Tested value
	Young's Modulus, GPa	1	Estimated
	Poisson's Ratio	0.43	Estimated
	First Cycle Slake Durability Index	83%	Tested value
	UCS, MPa	9	Tested value

Table 3 - Estimated CMRR values for a coal mine where CM technology inducted

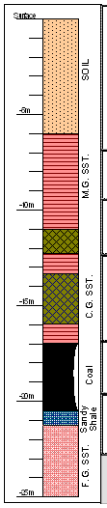

Parameter	Value for the rock type							
	Coal		Fine grained sandstone/ shaly sandstone		Medium grained sandstone		Coarse grained sandstone	
	Range	Value	Range	Value	Range	Value	Range	Value
Strength of the rock, MPa	23.5 MPa	15	22.5 MPa	15	16.3 MPa	10	9 MPa	10
Layer thickness, cm	7 cm to 15 cm	27	0.5m	32	0.5m	32	0.7m	36
Discontinuity Shear Strength Rating	Planar, rough, moderate to moderate cohesion joints	25	Planar, tight joints with weak laminae of shales	16	Planar, rough and tight cohesive joints	35	Planar, rough and weak cohesion joints	16
Moisture sensitivity (SDI%)	97%	0	93%	-3	93%	-3	83%	-10
Water surcharge adjustment	0-20ml/min.	0	0-20ml/min.	0	0-20ml/min.	0	0-20ml/min.	0
CMRR	67 (Good)		60 (good)		74 (Good)		51 (Moderate)	

Prediction of ground conditions using empirical approaches

Room width: Room width or gallery width for continuous miner operations are largely dependent on the cutting drum width of the continuous miner employed. It is generally twice the cutting width to facilitate ease in broken coal gathering and better economic returns. The mine management desired to introduce a continuous miner which has a 2.7 m wide cutting drum and requires at least 4.2 m wide galleries for making square pillar geometries. Economical operations of the machine demand a gallery width of 5.4 m (twice the cutting drum) so that two cuts can be achieved without changing the place of the machine. Junctions carry greater opening dimensions than the galleries in coal mines and hence carry greater risks of roof fall. Though coal junctions are always supported prior to their opening, it is imperative that a safe design should be based on safe junction geometry. Mark *et al*. (2001) proposes the following relationship to estimate maximum diagonal distance of a coal mine junction based on CMRR.

IsG = 20+0.26(CMRR) (1)

Where IsG is the diagonal distance of a junction in feet.

Based on the above relationship, a safe diagonal distance of 12 m for a junction is possible. This safe distance makes board width as 8.3 m, which is greater than the practical requirement of 5.4 m. Bieniawski (1989) uses concept of stand-up time and unsupported span which can be used to design safe gallery width for continuous miner operations. Further, British Coal Board considers 48 hrs of stand-up time necessary for design of cut-out distance. It may be noted that the concept of unsupported span by Bieniawski is one dimensional parameter. It considers either gallery width or the cut-out-distance (in the present case) as an unsupported span. Nomogram by Bieniawski (1989) for stand-up time is given in given in Figure 1. A gallery width of about 5.4 m will certainly be safe as per the nomogram for RMR value of 65 and stand-up time of 48 h.

Cut-out distance: Globally, there are two terminologies applied for permissible unsupported span by a continuous miner. Australia and UK favours single terminology of cut-out distance while S. Africa defines extended-cut as a cut-out distance more than 12 m and in USA, extended-cut is defined as a cut-out distance more than 6 m for remote controlled continuous miners. It is pertinent to note that limitation imposed on the permissible extent of cut-out distance in various countries is largely based on human and ventilation factors rather than issues related with roof instability (Canbulat and van der Merwe, 2000). Technically, roof dilation/bed separation stops once the face moved beyond a distance twice of the bord width (Canbulat and van der Merwe, 2000; Mark, 2007). Empirically, two approaches, namely, Bieniawaski's RMR (1976) and CMRR by NIOSH (Mark, 1999) can be used to delineate cut-out distance. A cut-out distance of 18 m can be predicted for a bord width of 5.4 m and stand-up time of 48 h using the concept of unsupported span as shown in Figure 1. There is, however, a practical limitation on this cut-out distance. A cut-out distance should only be practiced when there is a minimal chance of the CM operator stepping into the unsupported area for identification of variations in roof conditions. Bauer (1998) proposed the following relationship for a safe cut-out distance during pre-approval stage of a mine based on NIOSH's CMRR approach.

Cut Depth = 8.1 + 0.564 (CMRR) – 0.152 (Bord Width) – 0.0029 (Overburden) (2)

Where bord width and overburden are in feet.

Using the above relationship, cut-out distance comes out to be 14 m for a bord width of 5.4 m for a CMRR value of 74 for the mine. Mark (1999) reports that 12 m extended cuts will always be stable for a CMRR value higher than 55. The above two calculations corresponds to US experience. One striking difference between US data and this particular case is that the US mines have more than one lithological unit within the strata to be rock bolted whereas the present case has only one unit of coal itself. Keeping intact more lithological units than one has been a more difficult task in underground coal mining (Karmis and Kane, 1984; Kester and Chugh, 1980). Based on these findings, it may be safe to predict safe operations of the continuous miner in the present case with a cut-out distance beyond 12 m. The limit on cut-out distance beyond the machine length should include considering ventilation factors (dust and gases generation and their impact on the health of CM operator and chance of explosion in the mine) and human factors (chances of CM operator to step into unsupported area for visualising variation in roof rock conditions).

Prediction of ground conditions using numerical modelling

Three dimensional numerical models were prepared to evaluate stability of roof rock under various conditions and also to make predictions for continuous miner operations in 5.4 m wide galleries. All lithological units with their respective rock mass properties were used for the modelling. Corresponding materials, as per the typical lithologs, have been considered to follow Mohr-Coulomb's elasto-plastic rock failure model with non-associated flow rule. Various rock mass properties and corresponding rock properties are given in Table 4. The basis of conversion of the properties into rock to rock mass has been given by Sheorey (1997) and others (Bieniawski, 1978; Serafim and Pereira, 1983; Singh, 1979). The prepared models were provided with gravity loading only as initial load conditions for the reason that the mine is under a shallow depth cover of 30 m and there is no sign of distress due to *in situ* stresses. Model geometry prepared and used for the modelling is given in Figure 2. Model boundaries are truncated using the advantage of symmetric planes. Appropriate roller boundaries are placed at the far field model boundaries. Two categories of models are prepared. The models with a 4.2 m wide gallery were prepared for validation of the modelling while the models with a 5.4 m wide gallery were prepared

for prediction of roof conditions during continuous miners operations. All simulations have been solved following two stages. The staged excavation of mining steps were incorporated in the modelling after gravitational load condition is imposed and solved in an initial load condition. Staged excavation with 1 m mining steps covering 12 mining steps were introduced during the simulations. Models behaviour was evaluated after each simulation through observations of roof rock deformations, material failure state and safety factor contours. Numerical modelling results are compared with observed deformation values at 28 L/2D of the mine by multi-point borehole extensometers (MPBX). Corresponding predicted deformation values through the modelling and the observed deformation values are compared and shown in Figure 3. Comparison of the deformation values shows a correlation coefficient of 86% with the slope of the trend line as 25.64^0. The high correlation coefficient indicates that the prepared numerical models are accurate enough to provide reasonable trends for the mining conditions.

Table 4 - Rock mass properties used for Mohr-Coulomb material

Rock Type	Engineering Property	Property of the rock	Property of the rock mass
Coal (RMR=56)	UCS, MPa	28.5	3.16
	Tensile Strength, MPa	3	0.6
	Young's Modulus, GPa	7	1.4
	Poisson's Ratio	0.27	0.27
	Cohesion, MPa	-	0.72
	Friction, Degree	-	41.5^0
Fine Grained Sandstone/Shaly Sandstone (RMR=47)	UCS, MPa	22.59	1.6
	Tensile Strength, MPa	3	0.44
	Young's Modulus, GPa	4	0.6
	Poisson's Ratio	0.41	0.41
	Cohesion, MPa	-	0.69
	Friction, Degree		35^0
Medium Grained Sandstone (RMR=65)	UCS, MPa	16.33	2.84
	Tensile Strength, MPa	2	0.55
	Young's Modulus, GPa	7	1.96
	Poisson's Ratio	0.31	0.31
	Cohesion, MPa	-	0.7
	Friction, Degree	-	41^0
Coarse Grained Sandstone (RMR=41)	UCS, MPa	9.02	0.47
	Tensile Strength, MPa	1	0.1
	Young's Modulus, GPa	2	0.3
	Poisson's Ratio	0.43	0.43
	Cohesion, MPa	-	0.7
	Friction, Degree	-	37.9^0

Material failure state plot (Figure 4) and safety factor contours (Figure 5) are evaluated to make predictions for the roof behaviour during the continuous miner operations under 5.4 m wide galleries. The minimum safety factor contour value is of 1.97 at the face while roof level has the safety factor value more than ten. Evaluation of the modelling results for change in material state conditions (failure plots) did not reveal any material change in conditions for the mine from the gallery width widening from 4.2 m to 5.4 m even after 12 m of staged excavation simulation steps. Further, comparisons of deformation values and support pressure values between corresponding excavation stages of 4.2 m and 5.4 m wide galleries indicate that there will be 26% increase in deformation values and no change in support pressure values. An increase of 26% in deformation means that the deformation values will remain less than 1 mm for 5.4 m wide galleries. This miniscule change in the deformations will not result into any change in support pressure. These observations, like the empirical predictions, predict that the 5.4 m wide galleries with a cut-out distance selection based on human factor and ventilation factor will be safe for the mine.

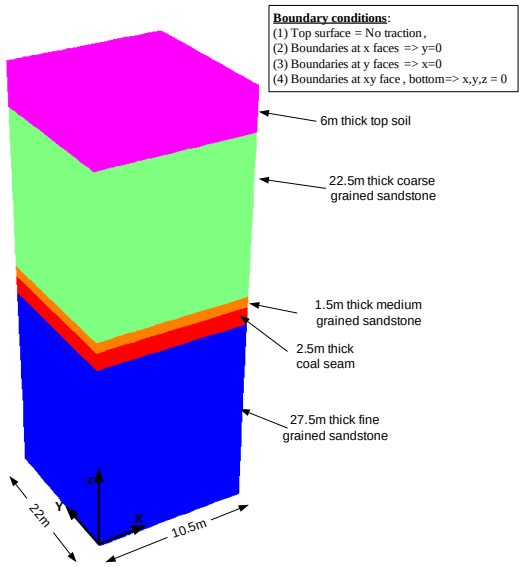

Figure 2 - Basic numerical model with far field boundary conditions

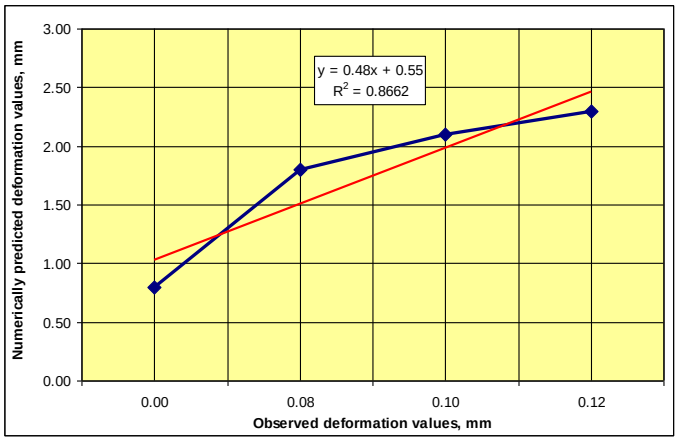

Figure 3 - Training of numerical simulations

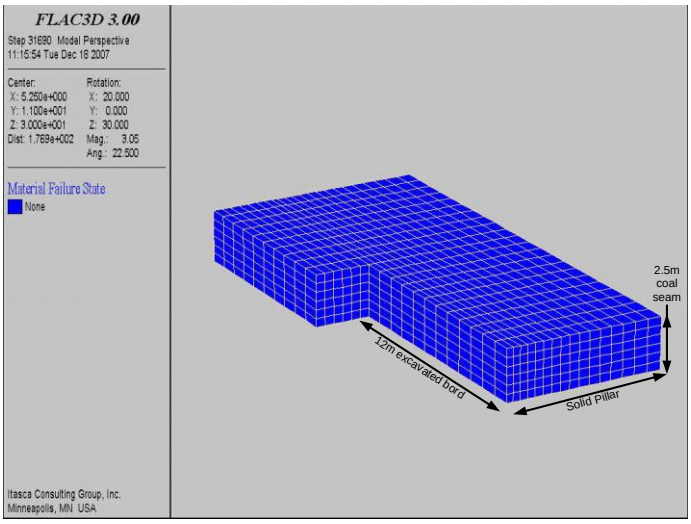

Figure 4 - Material failure state in coal seam for 5.4 m wide gallery

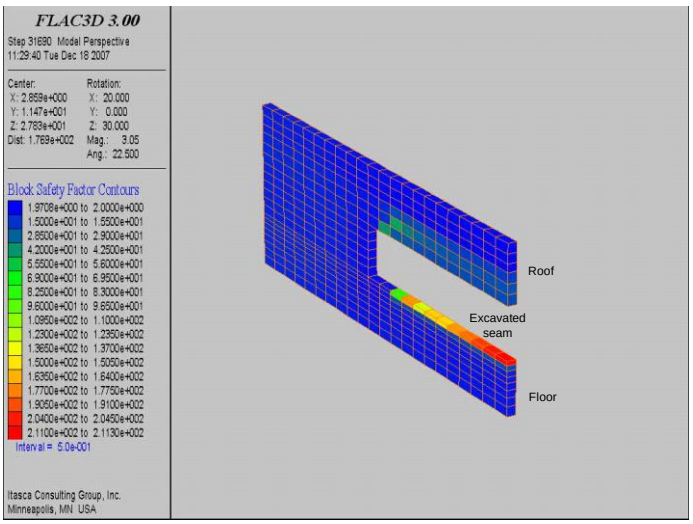

Figure 5 - Safety factor contours in roof, face and floor at the centre of bord for 5.4 m wide gallery

CONCLUSIONS

Concepts of designing room and pillar mining with continuous miner technology with respect to geomechanics issues are explained and a case study presented in this publication. The continuous miner technology is a viable technology to boost production and replace work force intensive technology of the drill and blast cycle for room and pillar coal mining method. The CM technology needs a proper assessment of geomining conditions prior to introduction of a particular type of continuous miner in the mine. It is experienced that one of the Indian mines introduced a continuous miner under adverse mining conditions and the machine is under-performing. Two of the mines in India where CMs were introduced after a proper study for design of room width and cut-out distance are operating without any geotechnical issues from the last five years. It may be, however, noted that both the mines were designed with concentration of rooms only which shall not be a part of the design. Pillars shall be smaller and rectangular for the CM technology in confirmation of the need for the final mining operations

ACKNOWLEDGMENTS

The authors sincerely appreciate the respective affiliated institutes for permission to present the case study and views. The views expressed in this paper are of the authors and shall not be construed as the views of the respective institute to which they belong.

REFERENCES

Bauer, E R, 1998. The impact of extended depth-of-cut mining on coal mine ground control and worker safety. PhD Thesis. The Pennsylvania State University, Department of Mineral Engineering, August.

Bieniawski, Z T, 1976. Rock Mass Classification in Rock Engineering. Exploration for Rock Engineering (Ed. Z.T. Bieniawski). Balkema, Rotterdam. 97-106.

Bieniawski, Z T, 1989. Engineering Rock Mass Classifications. Wiley, New York.

BIS 1985. BIS:11309, Indian standard method for conducting pull-out test on anchor bars and rock bolts). Bureau of Indian Standards, N. Delhi. 6p.

BIS 1992. BIS:11517 (Rock Bolts - Resin Type - Specification). Bureau of Indian Standards, N. Delhi. 2p.

BS 1996. Guidance on the use of rockbolts to support roadways in coal mines. Deep Mines Coal Industry Advisory Committee, Health and Safety Commission, UK. 34p.

Canbulat, I and Van der Merwe, J N, 2000. Safe mining face advance and support installation practice in mechanical miner workings under different geotechnical conditions. *SIMRAC Report*, COL 609. 100p.

CMRI, 1987. Geo-mechanical classification of coal measure roof rock vis-à-vis roof support. *Central Mining Research Institute Report S and T Report Submitted to Ministry of Coal*. 187p.

ISRM, 1978. Suggested method for determining sound velocity*. Int. J. of Rock Mech. Min. Sci. and Geomec*h. Abstr. Vol.15, pp. 53-58.

ISRM, 1985. Suggested method for determining point load strength. *Int. J. of Rock Mech. Min. Sci. and Geomech. Abstr.* Vol.22, No. 2, pp. 51-60.

ITASCA, 2003. Fast Lagrangian Analysis of Continua in 3 Dimensions. Version 2.0, User's guides, Minneapolis, USA.

Karmis, M and Kane, W, 1984. An analysis of the geomechanical factor influencing coal mine roof stability in appalachia. In *Proceedings of 2nd International Conference on stability in underground mining.* Lexington, KY. pp 311-328.

Kester, W M and Chugh, Y P,1980. Premining investigations and their use in planning ground control in the Illinois coal basin. In proceedings of *Ist Conference Ground Control Problem in the Illinois Coal Basin*. pp 33-43.

Mark, C, 1999. Application of the Coal Mine Roof Rating (CMRR) to Extended Cuts. *Mining Engineering*, April, 1999, pp 52-56.

Mark, C, Molinda, G M and Dolinar, D R, 2001. Analysis of roof bolt systems. *20th International Conference Ground Control in Mining*, Morgantown. 218-225.

Molinda, G M and Mark, C, 1993. The coal mine roof rating (CMRR) - a practical rock mass classification for coal mines. *12th International Conference Ground Control in Mining, Morgantown*. 92-103.

Serafim, J L and Pereira, J P, 1983. Consideration of geomechanical classification of Bieniawski. In Proceedings *International Symposium on Engineering Geology and Underground Construction. LNEC*, Lisbon, Vol. 1,127-140.

Sheorey, P R, 1994. A theory for in situ stresses in isotropic and transversely isotropic rock. *Int. J. Rock mech. Min. Sci. Geomech*. Abstr. 31, 23-34.

Sheorey, P R, 1997. Empirical Rock Failure Criteria. Balkema, Rotterdam.

Singh, B. 1979. Geological and geophysical investigation in rocks for engineering projects. In *Proceedings International Symposium In situ Testing of Soils and Performance of Structures,* India, Vol. 1, pp 486-492.