University of Wollongong
Research Online

Coal Operators' Conference

Faculty of Engineering and Information Sciences

2012

Automated bolting and meshing on a continuous miner for roadway development

Stephen van Duin
University of Wollongong, svanduin@uow.edu.au

Peter Donnelly
University of Wollongong

Ian Oxley
University of Wollongong, ioxley@uow.edu.au

Luke Meers
University of Wollongong, lmeers@uow.edu.au

Publication Details

S. van Duin, P. Donnelly, I. Oxley and L. Meers, Automated bolting and meshing on a continuous miner for roadway development, 12th Coal Operators' Conference, University of Wollongong & the Australasian Institute of Mining and Metallurgy, 2012, 93-101.

Research Online is the open access institutional repository for the University of Wollongong. For further information contact the UOW Library: research-pubs@uow.edu.au

AUTOMATED BOLTING AND MESHING ON A CONTINUOUS MINER FOR ROADWAY DEVELOPMENT

Stephen van Duin , Peter Donnelly, Ian Oxley and Luke Meers

ABSTRACT: Automated installation of primary roof support material has been identified as potentially being capable of increasing productivity and operator safety in the roadway development process within underground coal mining. A series of reprogrammable electromechanical manipulators have been designed to be integrated onto a continuous miner platform to automatically handle the installation of roof and rib containment consumables therefore removing the operator from the miner platform and dangerous face conditions during operation. The system has been demonstrated above ground in a laboratory environment and has proven to be capable of achieving cycle times that are consistent with that required to support high capacity longwall mines.

INTRODUCTION

Roadway development in underground coal mines is a unique process. The methods used to extract coal and support the exposed strata have slowly evolved over the past century by keeping the fundamental concepts of major machinery and incrementally modifying the designs and processes to make small improvements. As a result, the process has become very restrictive for further innovation; especially in the areas of automatic operation and control. The existing machinery used to drive roadways has been specifically designed to accommodate the harsh and challenging environment that it operates within and any changes to their fundamental design can be counterproductive to increased output. Therefore, this machinery still requires high levels of human intervention during its operation.

Subsequently, today's roadway development rates are failing to keep pace with modern longwall systems, and the methods currently used are proving to be inadequate if the industry is to progress to higher and more profitable production. Through a series of industry surveys (Gibson, 2005) the bottlenecks which restrain improved production and safety of operators have been identified and the manual strata support activities on a Continuous Miner (CM) have been acknowledged to be a major contributor to these constraints.

Primary support is necessary in most Australian mines for the geotechnical support of strata as roadways are driven. This activity is predominantly carried out manually onboard the continuous miner with the help of semi-automatic machinery. The manipulation and loading of consumables into this machinery is a manual process and existing roadway development systems and practices continue to rely on a high level of human intervention, including:

- Manually transferring roof mesh from a storage rack on the continuous miner discharge boom to the face and rotating the mesh into position over the roof bolting rigs;
- Carrying rib mesh along the side of the continuous miner and positioning it against the rib behind the rib-spall protection shield;
- Manually inserting drill steels into drill chucks and operating the roof and rib bolting rigs via push button, semi-automated drill rigs;
- Manually handling roof and rib bolts and their associated washers and chemical anchors, and installing them in the bolting rigs/drill holes after changing out the drill steel for the bolt installation chuck or tool;
- Operating the roof and rib bolting rigs to mix the chemical anchors and subsequently tension the roof and rib bolts, and
- Repositioning the roof and rib bolts for subsequent bolt installations or withdrawing the rigs to a safe position prior to proceeding with coal cutting.

University of Wollongong, Northfields Avenue Gwynneville, NSW, Australia, svanduin@uow.edu.au, T: 0242213420

These activities are typically undertaken within five metres of the immediate face in a confined working environment and often in close proximity to rotating equipment - hence the high number of injuries reported for personnel operating on or around continuous miners (Burgess-Limerick, 2009), and the subsequent introduction of Mine Design Guidelines (Industry and Investment, 2010) addressing risks associated with operation of bolting rigs, operator fatigue, and muscolo-skeletal disease.

Historically, the drilling equipment on the CM is regarded as ancillary and has been adapted to fit confined spaces as a secondary activity to the CM's fundamental function; i.e. to cut coal. Insufficient consideration has been given to operator ergonomics, which has resulted in less than ideal work stations for operators having to use powerful drilling machinery and manually manipulate awkward and cumbersome consumables from onboard storage modules or from the rear of the miner. Although some high output Australian mines have routinely reported roadway development rates as high as 8 to 10 m per operating hour in short bursts, human fatigue generally restricts operators from achieving these high rates over the longer term.

Over the past 2 to 3 years Self Drilling Bolts (SDB) have been trialled at a number of mines (Gibson, 2007; Gray, 2007; Bayerl, *et al., 2009*) and the benefits of a one-step drilling/bolting process are now becoming more widely accepted despite the substantial cost differential when compared to conventional resin anchored bolts. Further refinement in SDB technology to develop tensionable bolts, cut-able bolts, and to develop bolts less prone to binding/blockages in clay bands are expected to result in their wider adoption. When compared to the conventional drilling and bolting process, the reduction in the number of steps required for the installation of the SDB makes the one-step bolting process conducive to automation.

At least two CM Original Equipment Manufacturers (OEMs) now offer push-button semi-automated bolters for roof and rib bolting, and both are reported to be developing a second generation electro-hydraulic bolter which could, with SDB, be incorporated into an automated bolting system. Joy Mining Machinery has also demonstrated an automated bolting cassette which is utilized to feed drill steels, bolts and chemical anchors from the cassette into a bolting rig. Researchers are not aware of any on-board bolt handling systems being developed other than the prototype system that was included in CSIRO's Autonomous Continuous Bolting Machine (ACBM) (Kelly, *et al*., 2001).

In 1986, the US Bureau of Mines (USBM) embarked on a major research effort to develop technology that could substantially reduce worker exposure to face hazards by simply relocating the equipment operators to an area of relative safety (Hill, *et al.*, 1993; Schnakenberg, 1997). This Reduced-Exposure Mining System (REMS) research aimed to develop better mining practices using computer-assisted teleremote operation of continuous mining machines, haulage systems and roof bolting machines. However, for various reasons industry has failed to take up these technologies. In the hard rock and civil sectors, bolting and meshing automation has been used to a limited extent for large aperture roadways or single gateroad delivery.

Automation has been incorporated into the CM cutting cycle and CSIRO are currently developing self steering technology for the CM (Reid, *et al.*, 2010). However, relatively low level automation has been applied to the drilling process and little or no automation has been applied to the manipulation of consumables on the machine. In fact, mechanisation of any kind has had little impact on the manipulation of consumables in the modern mine. Therefore a need exists for the purpose built mechanisation of manipulating these materials in order to introduce consistent repeatability into the process and relieve the operator from the physically demanding activities operators experience from day to day.

This work aims to contribute to the Australian underground coal Industry's vision to achieve rapid roadway development production rates from a continuous miner of at least 10 m per operating hour and utilisation rates of 20 h per day. A key enabler of this vision includes the automation of the primary roof and rib support activities associated with roadway development. This paper discusses the challenges in automating the primary support process, and how a solution to these challenges has been reached. Each of the manipulators used to relieve the operator from their manual tasks are discussed in detail and the results of their performance in a set of laboratory surface trials analysed. Finally, the full roadway development process is discussed as an integrated system and what benefits this may provide in the future design of high productivity systems.

DESIGN FOR AUTOMATION

For every 1 m advance in a typical roadway development cycle (using a six roof bolt, four rib bolt per metre bolting density), 23 consumable items need to be handled consisting of 10 bolts, 10 wahser/plates, 1 steel roof mesh module (5.2 x 1.1 m), and two steel rib mesh sheets (1.2 x 1.6 m). This number increases when installing cuttable consumables which are also considered in the design. To manipulate these items, a total of six subsystems have been developed, which include:

1. Bolt delivery system
2. Washer delivery system
3. Roof bolt manipulator
4. Rib bolt manipulator
5. Roof mesh manipulator
6. Rib mesh manipulator

The automated system discussed in this paper has been designed to be integrated into the fundamental framework of a continuous miner platform as a retrofit arrangement. This approach was taken to reduce the scope of reengineering required in developing a next generation CM platform and therefore reduces the overall risk of an automated solution not achieving its desired objectives in the short term.

By using this approach several engineering technical challenges were identified and considered. These include:

- There is very limited space available for attaching additional infrastructure to the bulk of continuous miners used for Australian conditions, particularly in mines with lower mining heights and/or narrow roadways.;
- The variation in continuous miner models, frame sizes, and specialised configured layouts makes it difficult to design generic automation equipment across all platforms;
- The restricted use of materials, and non-approved electrical, servo-control, actuation and computer processing devices;
- The significant increase in rates of supply of consumables required to support higher development rates, potentially making it difficult to use onboard storage or buffered delivery systems with the existing continuous miner designs. This issue is compounded when accommodating any additional infrastructure required for installation of self drilling bolts;
- The variation in material consumables used from mine site to mine site;
- Adverse environment including rock falls, dusty conditions, corrosive water ingress and vibration all pose a technical challenge for the robustness of any proposed manipulation equipment, sensors etc;
- Mines, where strata support activities are routinely modified to adapt to challenging geotechnical conditions, have high variability or high density support in their process standards are anticipated to be difficult to automate;
- Many existing onboard services such as electrical supply and hydraulics would need to be modified, while new services such as pneumatics may be required as a powered source for some automation devices;
- Very limited space for movement and storage of consumables both at the face and in outbye areas;
- Extension of ventilation ducting and monorail segments is currently a manual task within the development process and warrants development of a means to eliminate or automate these tasks, including suspension of ventilation ducting on continuous haulage systems (where employed) or monorails;
- Restricted access to OEM control software and modification of the fundamental design;
- Risk associated with changing the fundamental major design of continuous miners.

DESIGN CONSTRAINTS

The automation system in this paper was designed to suit mine roadway dimensions with a minimum roof height of 2.8 m and minimum width of 5 m; a strata support bolt density of six roof bolts and four rib bolts per metre advance. The system also relies on using either one of two types of SDB. However,

to reduce the risk of any competing SDB not taken to fruition, this project has designed manipulation equipment to be as generic as possible and to accept either the Peter Gray® or Hilti® Style bolts (Figure 1). Although these two bolts are significantly different in diameter, the same manipulation principles can be used. In the latter constraint, both SDB technologies either consume more storage space than conventional bolts; or at least the resin systems associated with their one step process consume considerable space.

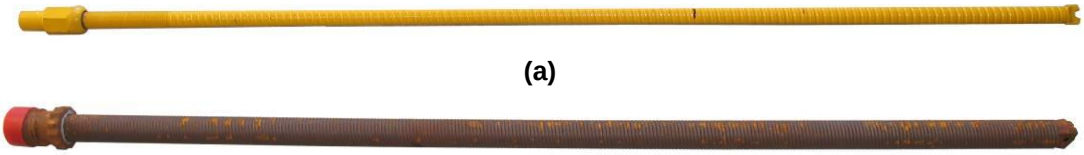

(a)

(b)

Figure 1 - (a) Peter Gray® (Ground Support Services) SDB, and (b) Hilti® OneStep SDB

As mentioned in the list of technical challenges, several issues are apparent when analysing the optimum method for storing and delivering consumable materials to the continuous miner. For those mines capable of achieving rapid roadway development rates in excess of 7 m per operating hour (MPOH) and approaching the target rate of 10 MPOH, material delivery becomes a significant challenge. It is calculated that for 10 MPOH advance, more than 1.4 t of consumables is required per hour using the Peter Gray® SDB. When using the Hilti® SDB, the weight of material for 10 MPOH exceeds 1.6 t. This equates to 40 t of material required to complete a 100 m pillar cycle.

It is anticipated that the increased volume of materials to be handled requires new methods for loading the continuous miner. It becomes clear from a process point of view that the numbers of bolts and mesh required to service the rapid roadway development process would deplete the physical capacity of existing onboard storage methods at too great a rate for them to remain practical.

When considering the use of the Hilti® SDB, this problem is compounded due to the increased diameter of each bolt reducing the amount able to be stored in onboard pods. For the Peter Gray® type SDB, additional pumping infrastructure and possible resin storage remain issues for the competing availability of onboard space.

Bolt delivery system

To assist in the controlled distribution of bolts, an automated bolt delivery system has been designed to selectively supply either roof or rib bolts to the respective bolt manipulators. The delivery system accommodates one metre's advance and is designed to have a limited surge capacity of an additional two roof bolts for circumstances where additional spot bolting is required.

The bolt delivery system is loaded during the one metre advance cycle with a maximum capacity of 11 bolts each side of the machine, consisting of six roof bolts and five rib bolts. Gravity and a series of controlled access points are programmed to allow the bolts to fall onto a common centreline before being conveyed towards the front of the continuous miner. The sequence of delivering either a rib or roof bolt is controlled by a simple logic control. The system is positioned on either side of the continuous miner (LH and RH sides) and an image of the device is shown in Figure 2.

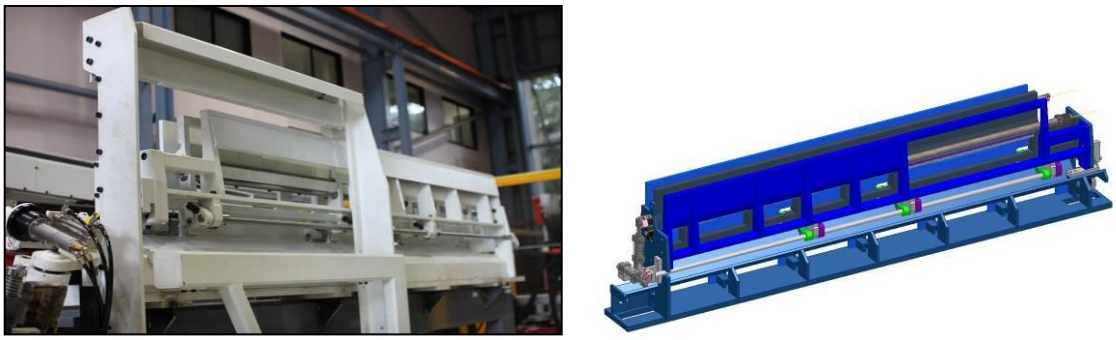

Figure 2 - Bolt delivery system

Automated washer delivery

During one metre advance, several styles of washers are generally required. These include either a roof bolt washer, rib bolt washer and/or cut-able polymer washer. The industry currently uses several variations in style of washer and Figure 3 shows some of these. For standardisation, two steel washers and one polymer washer adapted for the Hilti bolt were chosen for the delivery system.

Similar to the bolt delivery system, the washer delivery system selectively dispenses the correct washer on demand. For this to occur, two conveyor lines are incorporated into a single unit which transfers washers from the interface point at the rear of the machine. One conveyor transfers a roof bolt washer, whilst the other a rib bolt washer. At the front of the delivery system (see Figure 4), a flip and grab mechanism selectively retrieves and positions each washer in line to the bolt centreline.

Once dispensed, the respective roof or rib bolt is conveyed from the bolt delivery system through the centre of the washer where it is captured and secured before the bolt is manipulated into the drilling rigs.

Figure 3 - A selection of various washer designs used by the Australian coal industry

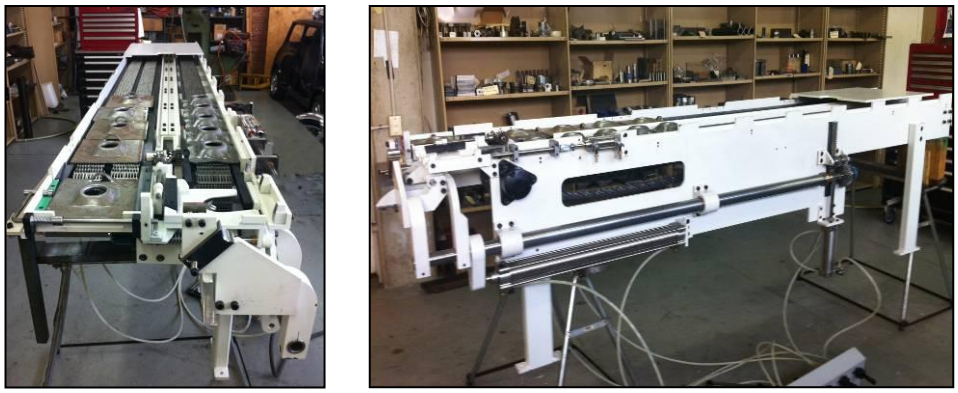

Figure 4 - Washer delivery system

Roof bolt manipulator

The manual installation of roof bolts into onboard drilling rigs represents a considerable portion of manual labour used to support the roadway development process. A skilled operator has the ability to efficiently follow a repetitious cycle of drilling and loading bolt and chemical consumables during a drill cycle. A typical drill cycle is comprised of the following steps:

1 Setting the drill rigs into position;

2 Loading the drill coupling with an adaptor dolly;

3 Loading the drill bit and collaring the hole;

4 Initiate auto drill and retract cycle;

5 Remove the drill bit and adaptor dolly;

6 Loading of a washer plate on the timber jack head plate;

7 Install a chemical resin sausage;

8 Loading of the bolt consumable into the drill chuck;

9 Initiate bolting advance and spin cycle;

10 Retract rigs.

By using a self drilling bolt, a number of these steps (2, 3, 5, 7) can be eliminated whilst the remainder of these steps can be automated and therefore relieve the operator of these tasks. The combined reduction in process steps and automation creates an opportunity to reduce drilling cycle times and eliminate operator exposure to high-powered machinery.

Several considerations were identified as being important specifications for the design of a bolt manipulator. As mentioned, the manipulator is required to handle both the Hilti® and Peter Gray® SDB. Secondly, in the event where manual roof support installation is required, the mechanism designed is required to occupy as small a volume as practical and can be removed or pushed aside from the work station to allow conventional access for operators during specific operational times. For example - manual operation may be required in difficult or high density bolting areas, such as intersections. In this example, it would be difficult to utilise automation as a result of high variability with bolt and mesh placement.

The design shown in Figure 5 illustrates a robotic type manipulator capable of accepting either SDB bolts one at a time. The roller feed system on the feed entry of the manipulator allows this to occur and simplifies the linear actuation of the bolts. After a bolt is loaded the mechanism is programmed to automatically place a bolt in either of the two vertical drilling rigs. Once the bolt is engaged in the drill rig mast, a rig mounted clamp supports the bolt whilst collaring and finally in-place drilling occurs.

For the bolt manipulator to function automatically, bolts are conveyed from the rear of the machine along the common centreline. This reduces the amount of handling equipment and Figure 5 illustrates the bolt flow required from the rear of the machine forward. The cylindrical shape of a bolt allows them to be simply conveyed longitudinally using a compact polymer roller mechanism located on the same centreline as the bolt delivery system.

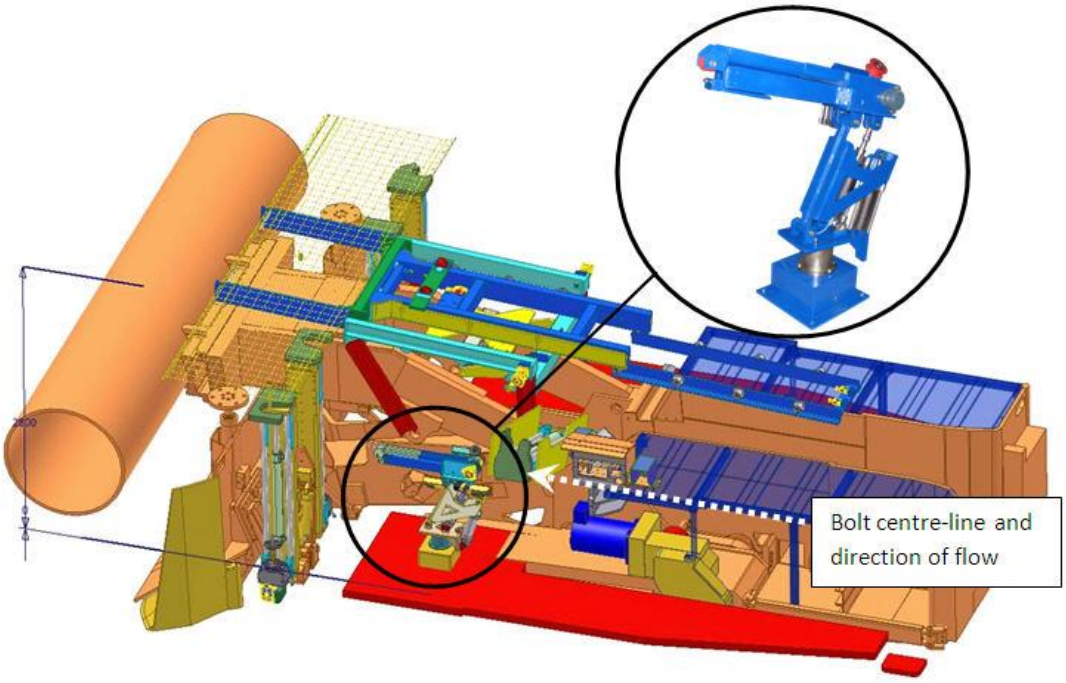

Figure 5 - Roof bolt manipulator positioned on a JOY 12CM30

Operation of the roof bolt manipulator has been tested and results indicate that a single roof bolt, once conveyed into the rear of the manipulator, can be loaded into one of the two vertical roof bolting rigs as well as attaching a washer plate within 20 seconds. This includes returning to the home position in preparation for reloading.

Rib bolt manipulator

The rib bolt manipulator is designed to be as compact as possible and is located on the side of the hydraulic rib bolting rig as shown in Figure 6. The hydraulic rig requires at least a homing position for the bolt to be loaded. For this unit, the rib bolter has three positions for one bolt to be installed above horizontal and one below. The third position is the horizontal, and is used for loading the rig.

Similar to the roof bolt manipulator, the rib bolt manipulator uses a set of pneumatically controlled roller mechanisms to longitudinally convey a bolt from the common centreline. The washer is attached during this stage and the bolt is secured during the cycle.

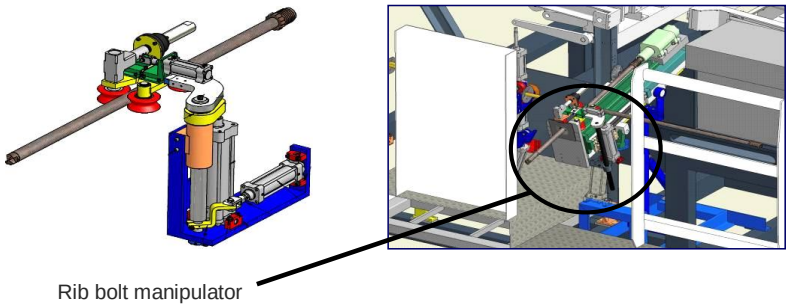

Figure 6 - Rib bolter schematic and location on the hydraulic rib bolting rig

Automated roof mesh manipulator

Manual methods for roof mesh installation are a physically demanding and a relatively constrained activity whereby mesh is typically man handled out-bye from the rear of the machine up over the centre coal conveyor before being rotated normal to the roadway and up onto the drill rig head plates. Alternatively for some frames, onboard storage requires mesh to be retrieved from a stack of mesh stored above the centre conveyor, rotated and placed upon the Temporary Roof Support (TRS). Both of these processes are required to transverse the mesh forward to the drill rig operator's platform before rotating the mesh and placing it in a bolting position.

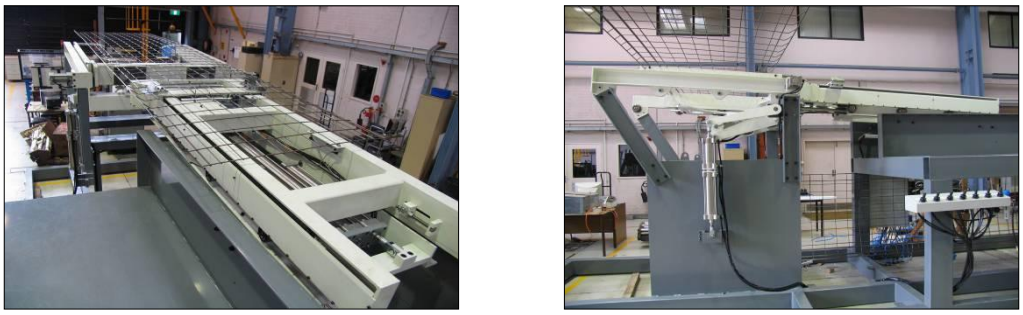

(a) **(b)**

Figure 7 - Roof Mesh Manipulator: (a) top view of mesh and manipulator, (b) side view of rotated mesh

Using the automated manipulator, mesh is conveyed from an interface point at the rear of the continuous miner where it is conveyed to a forward position by a chain conveyor. The manipulator is divided into two sections to allow backslide operation of the rib bolters for rib bolts greater than 1.2 m length.

A rotational turntable elevates and turns the mesh 90° whilst the front manipulator section transfers the mesh above the drilling rigs. Once in position, the roof bolting drill rigs autonomously carry the mesh to the roof whilst the loaded bolts locate through the apertures of the held mesh. After drilling, the mesh manipulator returns to the home position ready for the next cycle.

Automated rib mesh manipulator

Typically only one piece of mesh is required on each side of the miner for one metre advance. However, for the purpose of a demonstration and testing, the rib mesh manipulator has been designed

to store up to 10 pieces in a storage unit. Each piece of mesh can be automatically dispensed on demand. The storage unit separates a single piece of mesh onto a transfer arm (see Figure 8 (a)) whereby a concealed chain conveyor under the miner's side access platform, transfers the mesh alongside the machine and in front of a modified rib crash barrier.

The rib crash barrier has pneumatic gripping cylinders that grab the mesh once the transfer arm has conveyed the mesh into position. Once secured, the mesh is linearly extended upwards whilst simultaneously the crash barrier extends towards the rib (see Figure 8 (b)). This allows the mesh to be positioned within the top corner of the rib and roof, and prevents any fouling with existing roof and rib anchored bolts. At this point the rib bolt is then positioned within the rib bolter and the drilling cycle commences.

(a) (b)

Figure 8 - Rib Mesh Manipulator: (a) cassette dispensing unit and transfer arm, and (b) crash barrier in the extended out position

SYSTEM INTEGRATION AND LABORATORY DEMONSTRATION

Figure 9 illustrates the integration of the complete system on a laboratory test frame for which the entire system was mounted and tested. The dimensions of the frame represent the major mounting points of a Joy 12CM30/32 CM and allowed for the convenient experimentation in a laboratory setting. It is expected that the modular equipment can be removed and reattached to a real CM platform for future underground trials.

The laboratory demonstration has proven that a solution for automated bolting and meshing is achievable. Some major findings from the demonstration include:

- Automation of bolt and meshing activities is possible on a continuous miner without having to change the fundamental design of the miner platform and its operation;
- The cycle times achieved by the integrated automation are consistent with increased roadway development rates of at least 10 MPOH;
- An appreciation of the scale of mechanisms, actuation and control required to automate the process.

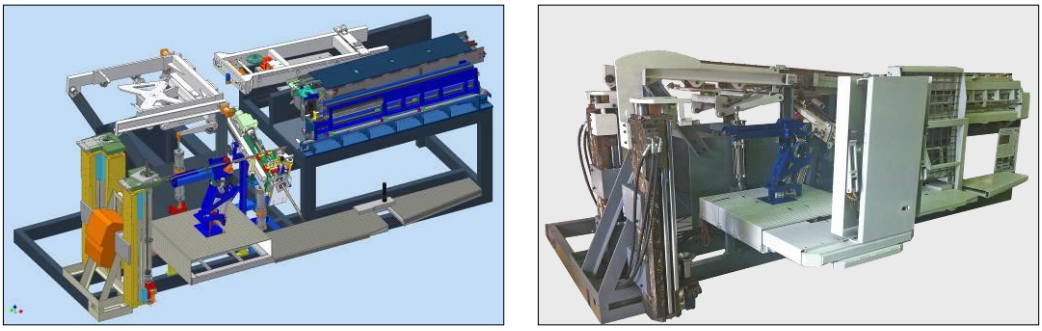

(a) (b)

Figure 9 - Laboratory demonstration and testing unit (a) CAD drawing, (b) Physical unit

CONCLUSIONS

The design for the automation of manual tasks on a conventional CM is not a trivial task and several constraints specific to the industry need to be considered. By using a laboratory above ground demonstration a satisfactory solution for automatic control and manipulation of roof and rib support materials now exists and shows that the prototype machinery and control can potentially remove the operator from the dangerous face conditions in an underground production environment.

This work has identified and quantified the time savings that can be achieved through automated repeatability. When taken to full fruition, cycle times, and therefore overall development rates, are expected to be improved inline with the target of 10 m per operating hour.

Finally, the prototype design and laboratory test facility have significantly reduced the technical risk in proceeding forward and adapting the automation to a continuous miner with the intent to conduct a more substantial trial within an underground production environment.

ACKNOWLEDGEMENTS

The researchers of this project would like to thank the Australian Coal Association Research Program and the Roadway Development Task Group for their ongoing support with funding and review. The researchers would also like to acknowledge the many individuals from industry who have participated in providing valuable feedback and research direction at various stages during the course of the research.

REFERENCES

Bayerl, M, Danzebrink, B, Thyrock, K, Opolony, K, and Gollnick, I, 2009. Application of Hilti One Step bolts for roadway support in German deep coal mines, *Proceedings - 28th International Conference on Ground Control in Mining (ICGCM) Morgantown,* WV, USA, pp 59-69.

Burgess-Limerick, R, 2008. Reducing injury risk associated with underground coal mining equipment, *ACARP*.

Gibson, G, 2005. Australian Roadway Development - Current status, *ACARP Report C15005*.

Gray, P, 2007, Self Drilling Rock Bolt Technology - Development of Self Drilling Rock Bolt, *ACARP Report C11028*.

Hill, J, Smelser, T, Signer, S and Miller, G, 1993. Intelligent drilling system for geological sensing, *Proceedings of the IEEE/RSJ International Conference on Intelligent Robots and Systems*, Yokohama Japan, July 26-30.

Industry and Investment NSW, Mine Safety, 2010. MDG35, *Guideline for bolting and drilling plant in mines*.

Kelly, M, Hainsworth, D, McPhee, R, Shen, B and Wesner, C, 2001. Rapid roadway development project progress report, *ACARP project report C9017*.

Reid, D, Hargrave, C, Ralston, J, Strange, A, Reid, P, Malos, J and Dunn M, 2010. Interim Report – CM2010 Continuous Miner Automation, *ACARP Report C18023*.

Schnakenberg, Jr, GH, 1997. Progress towards a reduced mining exposure system, *Mining Engineering*, v 49, n 2, pp 73-77, Feb.