University of Wollongong
Research Online

Faculty of Informatics - Papers (Archive)

Faculty of Engineering and Information Sciences

2010

Overview on the profile measurement of turbine blade and its developm

Huang Junhui

Wang Zhao
Xian Jiaotong University, P.R.China

Gao Jianmin
Xian Jiaotong University, P.R.China

Yanguang Yu
University of Wollongong, yanguang@uow.edu.au

Publication Details

Junhui, H., Zhao, W., Jianmin, G. & Yu, Y. (2010). Overview on the profile measurement of turbine blade and its developm. 5th International Symposium on Advanced Optical Manufacturing and Testing Technologies (pp. 76560L-1-76560L-11). SPIE.

Research Online is the open access institutional repository for the University of Wollongong. For further information contact the UOW Library: research-pubs@uow.edu.au

Overview on the profile measurement of turbine blade and its developm

Abstract
Turbine machinery has an extraordinary wide range of applications in the aviation, aerospace, automotive, energy and many other industries. The turbine blade is one of the most important parts of turbine machinery, and the characteristic parameters, pressure ratio of the engine and rotating speed of the turbine are all related to the shape and size of blades. Therefore, the profile measurement of turbine blade is an essential issue in the blade machining processing, however, it is difficult and particular to establish the profile measurement of turbine blade because of its complicated shapes and space angles of the blades, and the specific stringent environmental requirements need a more appropriate measurement method to the Turbine Blade profile measurement. This paper reviews the recent research and development on the Turbine Blade profile measurement methods, which mainly describes several common and advanced measurement methods, such as the traditional coordinate measuring machines, some optical measurement methods with the characteristics of non-contact like optical theodolite, three-dimensional photography, laser interferometry, as well as the laser triangulation method studied more recently and so on. Firstly, the measuring principles, the key technical issues and the applications in the Turbine Blade profile measurement of the methods which are mentioned above are described respectively in detail, and the characteristics of those methods are analyzed in this paper. Furthermore, the scope of application and limitations of those measurement methods are summed up. Finally, some views on the current research focus and perspective trend of the Turbine Blade profile measurement technology are presented.

Keywords
measurement, developm, its, profile, blade, overview, turbine

Disciplines
Physical Sciences and Mathematics

Publication Details
Junhui, H., Zhao, W., Jianmin, G. & Yu, Y. (2010). Overview on the profile measurement of turbine blade and its developm. 5th International Symposium on Advanced Optical Manufacturing and Testing Technologies (pp. 76560L-1-76560L-11). SPIE.

This conference paper is available at Research Online: http://ro.uow.edu.au/infopapers/844

Overview on the profile measurement of turbine blade and its development

Huang Junhui[a], Wang Zhao[a], Gao Jianmin[a], Yanguang Yu[b]
[a]Institute of Manufacturing System and Quality Engineering, School of Mechanical Engineering
Xi'an Jiaotong University, China;
[b]School of Electrical, Computer and Telecommunications Engineering
University of Wollongong, Australia

ABSTRACT

Turbine machinery has an extraordinary wide range of applications in the aviation, aerospace, automotive, energy and many other industries. The turbine blade is one of the most important parts of turbine machinery, and the characteristic parameters, pressure ratio of the engine and rotating speed of the turbine are all related to the shape and size of blades. Therefore, the profile measurement of turbine blade is an essential issue in the blade machining processing, however, it is difficult and particular to establish the profile measurement of turbine blade because of its complicated shapes and space angles of the blades, and the specific stringent environmental requirements need a more appropriate measurement method to the Turbine Blade profile measurement. This paper reviews the recent research and development on the Turbine Blade profile measurement methods, which mainly describes several common and advanced measurement methods, such as the traditional coordinate measuring machines, some optical measurement methods with the characteristics of non-contact like optical theodolite, three-dimensional photography, laser interferometry, as well as the laser triangulation method studied more recently and so on. Firstly, the measuring principles, the key technical issues and the applications in the Turbine Blade profile measurement of the methods which are mentioned above are described respectively in detail, and the characteristics of those methods are analyzed in this paper. Furthermore, the scope of application and limitations of those measurement methods are summed up. Finally, some views on the current research focus and perspective trend of the Turbine Blade profile measurement technology are presented.

Keywords: Turbine blade, profile measurement, coordinate measurement machine, optical theodolite, three-dimensional photography, laser interferometry, laser triangulation method

1. INTRODUCTION

Turbine blade is a common key part in engineering machinery and equipments, such as the wheel of hydropower generating units, blades of gas turbine and so on. And the profile, surface quality and manufacturing precision of the blades directly impact the turbine performance, efficiency and service life. However, due to the complicated shapes and space angles of the blade, it is difficult and particular to measure. The traditional model measurement is the earliest method applied in the profile measurement of turbine blade, but it has been gradually replaced by the CMM and other methods because of not satisfying the requirements of high measurement precision and efficiency. With the improvement of production efficiency, the CMM is so low on measurement efficiency and so easily influenced by the environment that it needs a more appropriate method to meet the needs of fast detection and on-site measurement and replace the CMM. Then some optical measurement methods, such as the optical theodolite, three-dimensional photography, laser triangulation method, are gradually applied in the profile measurement of turbine blade. These methods have the characteristic of measuring faster, less impact on the environment; especially the latter two methods have higher measurement precision and are easily to implement, so they have a wider application in the profile measurement. In some special occasions, it requires greater precision to inspect the manufacturing quality of blade surface, such as the roughness of blade surface, and those optical measurement methods can't meet the need of higher detection accuracy. And the laser interferometry technique has been applied in the measurement of surface micro-structure, but this technique has a limit of so small measuring range, while using interference fringe projection can solve it in another way. The measurement range becomes larger, but precision lower. Thus the interference fringe projection method is usually applied in the occasion of lower accuracy for large size measurements. With the development of three-dimensional

5th International Symposium on Advanced Optical Manufacturing and Testing Technologies: Optical Test and Measurement Technology and Equipment, edited by Yudong Zhang, Jose M. Sasian, Libin Xiang, Sandy To,
Proc. of SPIE Vol. 7656, 76560L · © 2010 SPIE · CCC code: 0277-786X/10/$18 · doi: 10.1117/12.865466

Downloaded from SPIE Digital Library on 19 Oct 2010 to 115.154.100.175. Terms of Use: http://spiedl.org/terms

surface measurement technology, more and more measurement techniques have gradually applied to the profile measurement of turbine blades. Each measurement method has its own characteristics, but also deficiencies. This paper reviews the recent research and development on the profile measurement of blades, and systematically describes the principles, key technologies, features and the application in turbine blade profile measurement of the above-mentioned methods in detail.

2. TURBINE BLADE PROFILE MEASUREMENT TECHNIQUE

There are so many methods for three-dimensional surface measurement, but the methods more often applied in the profile measurement of blade are CMM, photoelectric theodolite, three-dimensional photographic, laser interferometry and laser triangulation method and so on. This section details and analyzes the measurement principle, characteristics of those methods and their applications in the profile measurement of blades, and concludes the respective scope of application finally.

2.1 Coordinate measurement machine (CMM)

CMM is an advanced measuring equipment which emerged and developed from the 1960s, and integrates mechanical, electronic, optical and computer technology into it. It not only plays an important role in product quality testing, but also becomes one of the key equipment in reverse engineering. In particular, the measurement of complex shaped parts, for example, box, gear, turbine blades, automotive panels, and other complex shape measurement, it completes the measurement which is too difficult through conventional methods. Moreover, it significantly improves the efficiency and accuracy of the measurement, and can connect to the flexible system, has a strong versatility.

2.1.1 Measurement principle and system architecture

CMM can be divided into the main body, electrical apparatus, measuring head, and computer parts. The relationship between the various parts is shown in Figure 1, the main body is the pillar of the measurement system, and achieves the implementation of various movement of actuating mechanism. Electrical apparatus responds the computer commands and controls the movement of main body and probe, and transmits signal to the computer as a hub. Probe is an important component for achieving measurement and data acquisition, and it is connected to the main body by the mechanical structure and controlled by the electrical apparatus which transmit the signal obtained by the probe to the computer. The measurement accuracy and efficiency of CMM is directly impacted by the measurement accuracy and efficiency of the probe. Therefore it has become a hot research in the CMM study. Computer is the core of issuing instructions as well as data processing and display. With coordination of the above-mentioned parts, CMM completes the measurement tasks successfully.

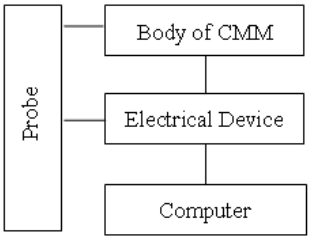

Figure 1: Schematic diagram of CMM

2.1.2 Research of probe, measurement path

In the above-mentioned component parts, the measuring probe is one of the key components of CMM, and directly affects the measurement accuracy and efficiency of CMM. General, there are two types of probes: contact and non-contact probe (optical probe), and the contact probe also has two types: hard probe and soft probe. The non-contact probe has the characteristics of zero contact force, so the deformation does not exist, and the measurement accuracy is higher. Especially it is much more suitable to measure soft or untouchable object. Moreover, optical non-contact probe can greatly improve the measurement speed, and can measure some special position which contact probe cannot reach. Meanwhile, the optical probe has a limit in improving measurement accuracy to further because of light interference and diffraction.

In addition to measuring probe, many researchers have done a lot of research on the measurement path planning to solve the variety of complex surface measurement. When the geometry is overlapping between two adjacent measured parts, occlusion or measuring hollow area, it may cause the probe to collide with the measured object, and the measuring task will be broken off, or even the worst, the probe will be damaged. In addition, the measurement path planning directly impacts the length of measurement time. Therefore, in order to improve the measurement efficiency and reduce the measurement workload, it is also necessary to do some research on measurement path planning.

Downloaded from SPIE Digital Library on 19 Oct 2010 to 115.154.100.175. Terms of Use: http://spiedl.org/terms

2.1.3 Application in the Turbine Blade profile measurement

It is common and reliable to apply the CMM in the Turbine Blade profile measurement today. Figure 2-a is shown the schematic diagram of single blade measurement. The worktable is made of granite with little deformation affected by the temperature. The measuring probe is driven to move in the x, y, and z directions by measuring arms, while the blade is erected or flatted on the worktable and fixed with special fixture. After the measuring surface is determined, the number and distribution of sampling points is needed to confirm which based on the specific status of blade profile. Otherwise it needs to avoid the collision between measuring probe and blades. Finally the measurement path is generated, and the blade profile measurement will be completed. The short blades is generally erectly placed to measure as shown in Figure 2-b, and Figure 2-c shows the measurement of the integral impeller [1]. The shape of the impeller is complex, and the space between two adjacent blades is narrow; even there might be geometric overlapping between the blades. So it is difficult to measure in the traditional ways, and a 3-axis CMM, together with a dividing head with two rotational axes, undertook the measurement.

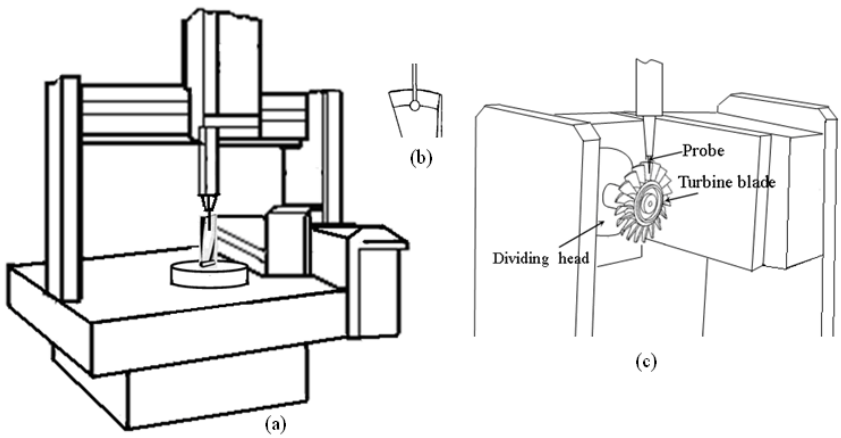

Figure 2: CMM for turbine blades measurement

Until now, the measurement accuracy of CMM is the highest and generally up to micrometers. While using high-precision measuring probe, it can be achieved even sub-micron order of magnitude accuracy. For example, Savio used CMM measuring turbine blades, and the uncertainty is about 5-10um [2].

2.1.4 Application scope and limitations

So far, CMM is the most common and reliable measurement method of profile measurement of blades. It is the method with the highest measurement accuracy today, and has the advantage of completing precision measurement of the profile with complex structure. However, the measurement efficiency is much low because of measuring through point-by-point. And the measuring range is restricted by the worktable, and it cannot measure object lager than the worktable. Moreover, the cost of using CMM is relatively high, and it is generally only used in the laboratory because it is vulnerable to the environment impact. Therefore, the CMM is appropriate to the measurement of relatively small and complex structured workpiece.

2.2 Optical theodolite

Optical theodolite is an optical and non-contact measurement instruments and based on angle measurement, which is produced in the 60 years of the 20th century. And it is widely used in aviation, aerospace, weapons testing, mapping and other fields. The technology has significant feature of measuring large-size objects with relatively high measurement precision. Thus, it has a certain application in the on-site measurement of large-size turbine blades.

2.2.1 Measurement principle and system architecture

The basic principle of optical theodolite measurement bases on the theory of three-dimensional rendezvous, which is shown in the Figure 3-a [3-4].

In the figure 3-a, b is the baseline which is the horizontal projection of the line connecting A and B, and the height difference of A and B is defined as h_{AB}. α_1 and α_2 is the horizontal angles of two theodolites when aiming at any point on the space, and the β_1, β_2 is the zenith angle. Then the three-dimensional coordinates of the point P is expressed as:

Downloaded from SPIE Digital Library on 19 Oct 2010 to 115.154.100.175. Terms of Use: http://spiedl.org/terms

$$x_P = b\cdot\sin\beta_2\cdot\cos\beta_1/\sin(\beta_1+\beta_2) \qquad 2\text{-}1$$
$$y_P = b\cdot\sin\beta_2\cdot\sin\beta_1 / \sin(\beta_1+\beta_2) \qquad 2\text{-}2$$
$$z_P = [b\cdot(\sin\beta_2\cdot\cot\alpha_1 + \sin\beta_1\cdot\cot\alpha_2)/\sin(\beta_1+\beta_2))+h_{AB}]/2 \qquad 2\text{-}3$$

Therefore, the three-dimensional coordinates of any point on the measurement space can be measured by the horizontal and zenith angles of two theodolites.

Before use of optical theodolite measurement system, it has to establish the length of the baseline b and the height difference h_{AB}. And the length error of the baseline b significantly influences the measurement accuracy. In general, a known length ruler, which is placed on the side of measurement space of two theodolites, is used to measure the system parameters of b and h_{AB}. The end points of the standard ruler are measured by theodolite, and their coordinates, namely, (x_M, y_M, z_M) and (x_N, y_N, z_N), are expressed as the horizontal and zenith angles, namely, (α_{1M}, α_{2M}, β_{1M}, β_{2M}) and (α_{1N}, α_{2N}, β_{1N}, β_{2N}). Then the approximate length of baseline b is assumed to be b_0, thus the length between the two end points can be expressed as the coordinates of the end points, which is also the length of the standard ruler. That is

$$L_0 = \sqrt{(x_M - x_N)^2 + (y_M - y_N)^2 + (z_M - z_N)^2} \qquad 2\text{-}4$$

Then the value of the baseline b is solved by the similarity, that is

$$b = b_0\cdot L/L_0 \qquad 2\text{-}5$$

The height difference h_{AB} is

$$h_{AB} = \frac{b}{2}\left[\frac{\sin\beta_{2M}\cdot\cot\alpha_{1M} - \sin\beta_{1M}\cdot\cot\alpha_{2M}}{\sin(\beta_{1M}+\beta_{2M})} + \frac{\sin\beta_{2M}\cdot\cot\alpha_{1M} - \sin\beta_{1M}\cdot\cot\alpha_{2M}}{\sin(\beta_{1M}+\beta_{2M})}\right] \qquad 2\text{-}6$$

Optical theodolite measurement system generally contains two theodolites, computer, standard ruler, as well as markers which can be pasted on the measured object, and the structure of the measurement system is shown in Figure 3-b. The theodolite is controlled by a computer and aims at the measured point, then the value of the measurement angles of the theodolite is read out, and the coordinates of the measured points are obtained. Therefore, the optical theodolite measurement system has the characteristics of simple structure and convenient operation, and its measurement accuracy greatly depends on the angle measuring accuracy.

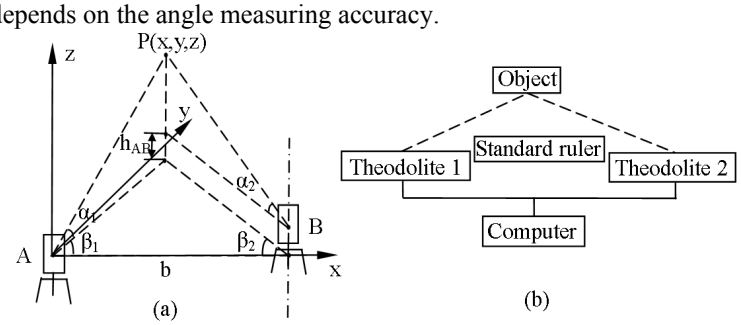

Figure 3: Schematic diagram of optical theodolite

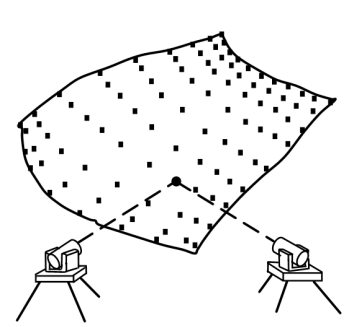

Figure 4: Schematic diagram of optical theodolite measurement

2.2.2 Application in the Turbine Blade profile measurement

The optical theodolite known for its relatively high precision for large size measurements has been applied to some extent in the profile measurement of turbine blade. The hardware of system is mainly composed of the optical theodolite, markers and computer, and the software is used to process and analyze the measured data. For example, the software can be used for reversing the measured surface according to the measured data, or calculations of the machining allowance [5]. The structure of the measurement system is shown in Figure 4, the blade under test is fixed with the special fixture, and the system parameters, namely, b and h_{AB}, is obtained using the standard ruler. Then the number of measuring points and position are planned, and the makers are affixed to the position of measuring points. The horizontal and zenith angles are read out when two theodolites aims at the same marker respectively, and the coordinates of measured points are obtained by processing those angles. After all the points are measured, the three-dimensional modeling of the blade is reconstructed by the system software, and the measurement error is analyzed.

The number and distribution of measurement points greatly impact the measurement accuracy and efficiency. The layout of measurement points should properly reflect the characteristics of the workpiece under test. The measurement point density should be appropriate that it is too sparse to reflect the characteristic of the detected objects, while it is so intensive that the measurement accuracy may be improved little, but the workload will be increased and the measurement efficiency will be reduced. Therefore, rational planning of measurement points should base on the specific requirements.

The measurement accuracy of optical theodolite measurement system mainly depends on the angle measuring accuracy, and generally the relative precision can reach 10^{-5} [3, 4].

Downloaded from SPIE Digital Library on 19 Oct 2010 to 115.154.100.175. Terms of Use: http://spiedl.org/terms

2.2.3 Application scope and limitations

The use of optical theodolite technology for three-dimensional coordinate measurement of large-size blades is a much effective method. It is flexible and easily to operate, and not affected by the environmental impact, thus it can be used in the workshop and also suitable for quality inspection of blade manufacturing process. However, the method is still based on point measurement; the efficiency will greatly decrease with the increase of the measuring points. In addition, its accuracy is limited not only by the angle measuring accuracy but also by operation level. Therefore, it is difficult to achieve automation and high-precision measurements.

2.3 Three-dimensional photography(Stereo-photography)

Three-dimensional photography, due to the large measurement range, has been universally used in the topographic mapping, construction, biomedical and industrial areas for a long time. And it is also applicable in large-size workpiece measurements.

2.3.1 Measurement principle and system architecture

Three-dimensional photographic method is based on the parallax theory, that is, it uses two cameras to shoot the same object in different images, and then according to the image point matching and processing, the coordinates of the measurement points can be obtained, as shown in Figure 5. Assuming that, the coordinate origin of the measurement system coincides with the left lens center. (x, y, z) is the coordinates of measurement point P in the camera coordinate system, L is the length of baseline, (x_l, y_l) is the coordinates of left projection point P_l in the left image, (x_r, y_r) is the coordinates of right projection point P_r in the right image, F is the camera focal length (assumption, the focal length of the two cameras are the same), D is defined as the parallax of corresponding points in two images, and $D = | P_l - P_r |$. Therefore, the coordinates of point P will be obtained through the triangle similarity relation:

$$z = FL/(x_l - x_r) = FL/D \qquad 3\text{-}1$$

Where, $D = | x_l - x_r |$.

When the z coordinate is obtained, the other coordinates can be calculated with a simple relationship between the geometric perspectives, namely:

$$x = Lx_l/D \qquad 3\text{-}2$$

$$y = Ly_l/D \qquad 3\text{-}3$$

Thus, the coordinates of any measurement point will be calculated by the position of the corresponding points in the images after the system structure parameters F, L being obtained. And the system structure parameters can be obtained by calibration.

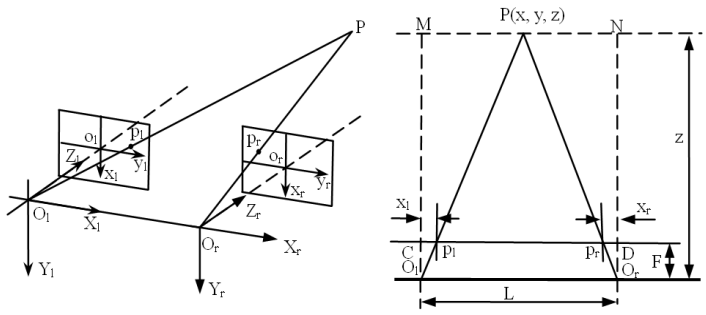

Figure 5: Schematic diagram of binocular three-dimensional photography

2.3.2 Research of stereo matching algorithm

The principle of three-dimensional photographic method is simple, but it needs to match the corresponding points in two images, and the matching accuracy and speed will directly affect the accuracy and efficiency. Therefore, the stereo matching algorithm is a key technology of stereophotography.

The matching algorithms can be classified into two kinds: area-based matching and feature matching. Area-based matching is a method that an area with some point as its center is selected in an image, and another area is found to match the former with the largest correlation coefficient in another image, the center of the latter area is considered to be the corresponding point of the selected area's center. In the feature matching, feature elements are extracted firstly, which are sometimes the points, lines or other geometric primitives with significant changes in gray, then matching the pairs

Downloaded from SPIE Digital Library on 19 Oct 2010 to 115.154.100.175. Terms of Use: http://spiedl.org/terms

with those feature elements. The common feature matching algorithms are: relaxation method [6], tree search method [7] and the matching method based on epipolar constraint [8] and so on. There are also manual coding characteristic elements used in the corresponding points matching, these features are easily identifiable, and each element has a unique coding feature, therefore, the feature matching can be easily to achieve.

2.3.3 Application in the Turbine Blade profile measurement

Three-dimensional photography is a common method used in the profile measurement of blades. Figure 6 shows the typical structure of the profile measurement system. The blade is fixed with special fixture, and the measured surface is placed appropriately in the vision of camera to reduce the occlusion. Then the manual encoding feature elements are pasted on the blade surface at the position to be measured. As an example, the feature elements is shown in figure 6-b, the code value is 01011010. The blade with feature elements is shot by camera 1 and 2, and the corresponding points are matched as the code value is the same after the elements being decoded. The center of the feature elements is considered as the image points corresponding to the measured points. Thus, the three-dimensional coordinates of measured points can be obtained by the equation 3-1 to 3-3.

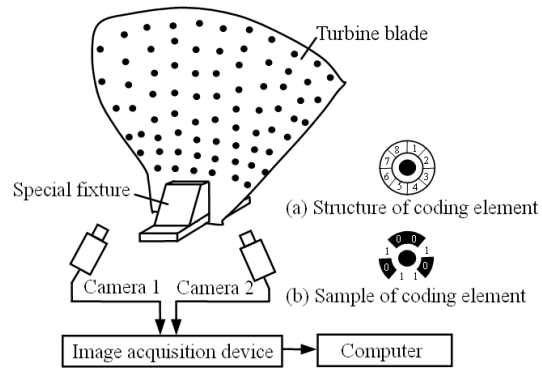

Figure 6: Structure of turbine blade measurement system of three-dimensional photography

The measurement accuracy and efficiency of three-dimensional photographic method mainly depends on the feature points matching and processing, that is, it mainly relates to camera pixel, feature point identification and matching algorithms, as well as the computer processing capability, and it is affected little by environment impact. In addition, as the shooting time is short and much of the work is carried out in the computer, it can meet the real-time measurement need. In general, the measurement accuracy of three-dimensional photographic method is about 10ppm, Liang used this method to measure the profile of hydraulic turbine blade, and the measurement error is less than 0.1mm/3m [9].

2.3.4 Application scope and limitations

Three-dimensional photographic method is applicable to large-size three-dimensional profile measurement, and it almost can be measured under any circumstances. However, the measurement accuracy is limited by the restriction of feature point's identification accuracy, and it needs a large number of correlation matching operations. Therefore, it is suitable for the detection of morphological features and the large-size real-time three-dimensional measurement in the occasions of on-site environment.

2.4 Laser interferometry

Laser interferometry is a precise measurement method that it can reflect the surface morphology of the measured object, and is usually used for micro-measurement. In the machining of blade, it can be used to detect the blade surface morphology, such as roughness. This paper mainly introduces the blade profile measurement, so it only discusses the laser interference technology applied to the blade profile measurement.

2.4.1 Measurement principle and system architecture

In the laser interferometry, the measurement results are generally given in the form of interference fringes, while the stripes can directly reflect the surface height information. In general, the detection of interference fringes is introduced through using two kinds of structure, as shown in Figure 7. In the figure 7-a, , such as holography, the coherent light beam emitted by a laser is divided into two beams, one beam as an object beam is projected onto the measured surface, and then reflected to a detector; the other beam as a reference beam is directly projected onto the same detector. The reflected object beam and the reference beam will intervene and produce

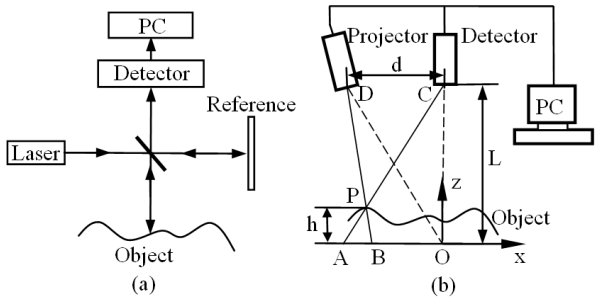

Figure 7: Measurement principle of laser interferometry

Downloaded from SPIE Digital Library on 19 Oct 2010 to 115.154.100.175. Terms of Use: http://spiedl.org/terms

interference fringes detected by the detector. Then the surface contour information is obtained by analyzing these interference fringes. However, the measurement range of this approach is very small, which is limited by the wavelength. And it is more suitable for surface microtopography or micro-displacement detection, while not suitable for large-size object measurement. In the figure 7-b, the interference fringes is directly projected to the measured surface, and shot by a detector after being modulated by the measured surface. Then the height information of measured surface will be obtained by analyzing the phase of interference fringes. This approach is less restricted by the wavelength of light waves, therefore, its measuring range can be larger, and the profile measurement of blade adopts this approach. Later it will detail the measurement principle and application in blade profile measurement of the latter approach.

2.4.2 Application in the Turbine Blade profile measurement

As shown in Figure 7-b, C, D is the pupil center of the optical detector and projector respectively, d is the distance between C and D, L is the distance from the line connecting C and D to the reference plane. x-o-y orthogonal coordinates coincides with the measurement reference plane, z axis coincides with optical axis of the detector imaging lens and points to the detector. Assuming that, P is the intersection of the stripe projection and object plane, B is the intersection of the stripe projection and reference plane, A is the intersection of the line connecting C and P and the reference plane, and h is the height of point P to the reference plane. By triangle similarity, the height h can be obtained by:

$$h = L\overline{AB} \big/ (d + \overline{AB}) \qquad 4\text{-}1$$

The length $\overline{AB}$ can be indicated by the intensity distribution of the stripe projection onto the reference plane and object plane, and d is much larger than $\overline{AB}$. So the relationship between h and the phase difference of the intensity distribution of stripe projection is described by:

$$h \approx Lk\Delta\phi(x,y)/d = k_1\Delta\phi(x,y) \qquad 4\text{-}2$$

Where, k is the structural parameter related to optical system; $\Delta\phi(x,y)$ is the phase difference of the light intensity distribution on the object and reference plane; $k_1 = L\,k / d$.

Thus, the surface information of the measured object can be obtained by detecting the phase of interference fringes, while the phase is usually solved by an approach of phase shift. For example, in the four-step phase shift method [10], the light intensity of the interference fringes which is projected on the object is I(x, y), and expressed as:

$$I(x,y) = b(x,y) + a(x,y)\cos\phi(x,y) \qquad 4\text{-}3$$

Through additions of the amount of phase shift, that is, 0, π/2, π, and 3π/2, there are:

$$\begin{aligned} I_1(x,y) &= b(x,y) + a(x,y)\cos\phi(x,y) \\ I_2(x,y) &= b(x,y) - a(x,y)\sin\phi(x,y) \\ I_3(x,y) &= b(x,y) - a(x,y)\cos\phi(x,y) \\ I_4(x,y) &= b(x,y) + a(x,y)\sin\phi(x,y) \end{aligned} \qquad 4\text{-}4$$

Then, the phase can be solved by:

$$\phi(x,y) = \arctan(I_4 - I_2)/(I_1 - I_3) \qquad 4\text{-}5$$

In the interference projection measurement method, the formation of the interference fringe projection and the acquisition of phase are the key technologies, which directly decide the measurement accuracy and efficiency, while the formation of interference fringes should be stable. Another problem that should be noted is the phase unwrapping. In the use of phase shifting or Fourier transform methods for solving phase, the result is obtained in the form of wrapped phase ψ (x, y), and its value in [-π ~ π]. But the real phase φ (x, y) may be: φ (x, y) = ψ (x, y) +2nπ, (n is an integer), therefore, the wrapped phase needs to be unwrapped. And the precision and complexity of the unwrapping processing directly impact the accuracy and efficiency of the interference projection measurement, so it is also a key technology in the interference projection method.

Application in the three-dimensional profile measurement of blade, the measurement system structure is similar to the form shown in the figure 7-b. The blade is fixed on the worktable and placed into the proper perspective firstly, so that the projector and detectors are able to fully project and detect the measured surface respectively. Interference fringes are generated by computer-controlled projectors, and projected to the measured object surface; the interference fringes modulated by object surface are detected by the detector at the same time. Then the measurement data is transmitted to computer and processed. The relative height information at the various points of the measured surface is obtained by calculating the phase difference. If the need for measurement accuracy is not high, it can project a number of interference fringes to cover the entire measured surface in order to achieve high measurement efficiency. In addition, due to the

Downloaded from SPIE Digital Library on 19 Oct 2010 to 115.154.100.175. Terms of Use: http://spiedl.org/terms

calculation of phase difference at each point is independent, the calculation errors at each point are independent and do not interact, which is favorable in the situation of the surface with large curvature change rate.
Also, use of other interferometry technologies, such as dual-frequency heterodyne interferometer, can achieve lager-size measurements. In short, the laser interference technology is a method of high accuracy, while using laser interferometer displacement sensor, its accuracy can achieve nano-scale, but because its measuring range is too small, environmental demand is rigorous, and measurement results are vulnerable to the impact of surface characteristics, the applications is limited. And the use of interference fringe projection methods, the measuring range can be bigger; its accuracy can reach 20um / m [11].

2.4.3 Application scope and limitations

From the perspective of interferometry principle, whether it is laser interferometer displacement sensor method (Figure 7-a) or through acquiring fringe projection method (Figure 7-b), the measurement range are not large, although the latter approach can be used to achieve large-size measurements, its measurement accuracy will be lower due to the thickened fringe projection. However, laser interferometry is still a high precision non-contact measurement method and generally applied to the surface micro-structure measurements. Therefore, laser interferometry could be considered in the requirements of high precision, small size micro-surface topography measurements.

2.5 Laser triangulation method

Laser Triangulation is the most popularly used technology of optical 3D measurement, it is based on the traditional triangulation, and the depth information of the point is calculated by the measurements of offsets of measured points and the baseline. The method has characteristics of simple structure, fast measurement speed, and flexible operation, so it has a wide range of application in product detection, computer-aided medical, cultural heritage protection and so on.

2.5.1 Measurement principle and system architecture

The basic principle of laser triangulation measurement may be summarized as follows: the light points, lines or multi-lines are projected onto the object surface and form feature points, and the feature points modulated by object surface are deformed and shot by a camera; in order to obtain three-dimensional coordinates of feature points, it needs to calculate the displacements of image feature points to the calibration reference point, thus the measured surface contour information can be obtained by processing all the displacements. Figure 8 shows the basic principle of laser triangulation. O is the intersection of laser beam and baseline, and it is also the reference point, and O' is the image of O; h is the height of the point A to the baseline, and A' is image of A in the photoelectric detector. Thus, the height h can be calculated by the displacement according to triangulation principle, that is:

$$h = ax'\cos\theta_1 / [b\sin(\theta_1+\theta_2) + x'\cos(\theta_1+\theta_2)] \qquad 5\text{-}1$$

Where, x ' is the displacement of image point;
a is the distance between the intersection of laser beam axis and the receiver lens axis on the baseline and receiver lens pre-principal planes;
b is the distance between receiver lens post-principal planes and center point of imaging plane;
θ_1 and θ_2 is respectively the angle between the laser beam optical axis or receiving lens optical axis and the normal at the reference point O.
And a, b, θ1, and θ2 are the system structure parameters and obtained by calibration. In order to obtain the three-dimensional information of the entire measured surface, it needs all the points on the surface under test to be scanned, but in the actual measurement, it applies projection lines or multi-lines to projection onto the measured surface, thus more data can be obtained by once projection to improve the measurement efficiency.

2.5.2 Research of extraction of light-knife center, coding algorithms, calibration

As the laser divergence, surface scattering, camera lens distortion, projection depth of field or other reasons, the stripe image has a certain width. And accurate determination of the stripe center is a key technology to achieve accurate measurement. Now there are typical knife center extraction methods: extreme value method, threshold method, center of gravity method. Extreme value method is simple and fast, but the accuracy is poor when the signal to noise ratio is low, and the location error is about plus or minus one pixel. Threshold method is fast and suitable for hardware direct calculation, but the accuracy is low and generally used only for a rough estimate of the location, however, the accuracy will be greatly improved when the light-knife is fine. Center of gravity method has a characteristic of faster speed and

Downloaded from SPIE Digital Library on 19 Oct 2010 to 115.154.100.175. Terms of Use: http://spiedl.org/terms

high precision, and the position error can reach sub-pixel, so it meets the occasions of fast and high-precision measurement.

Use of multi-knife (multi-line) in the laser triangulation method needs to establish the one-to-one correspondence relationship between the projection stripes and image stripes. Thus, the coding method is usually used in the stripes projection, and the binary coding is commonly used with the characteristic of stability, anti-interference and so on. With the improvement of accuracy of photoelectric color receivers, the color CCD or other color receiver is used in the laser triangulation measurement, and the color projection stripes instead of the traditional binary projection stripes, while color information is easy to identify, it can help to reduce the impact of measured surface color and to solve the contradiction of fringe spacing and recognition, and then lots of color coding methods are proposed [12-13].

As shown in figure 8, the system structural parameters, namely, a, b, θ1 and θ2, are difficult to measure directly, therefore, they are often calculated by calibration. The common calibration usually only considers the external parameters, such as a, b, θ1 and θ2, but the internal parameters, such as receiver lens distortion, are generally ignored. However, with the improvement of measurement accuracy, the internal parameters have significant effect on the measurement accuracy. Therefore, in addition to the external parameters in calibration, it also needs to calibrate the internal parameters. The typical integrated calibration methods are: Tsai's two-step method [14] and the plane calibration method proposed by Zhang [15].

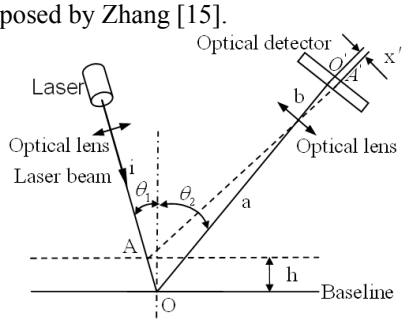

Figure 8: Schematic diagram of laser triangulation

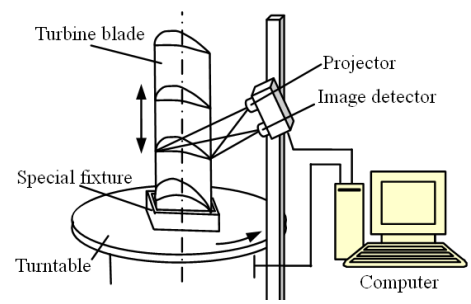

Figure 9: Schematic of line structured light measurement system for turbine blade profile measurement

2.5.3 Application in the Turbine Blade profile measurement

Figure 9 is the schematic diagram of line scan mode of laser triangulation measurement system, the blade is fixed on the turntable which can also move up and down, so the entire blade surface can be measured with scanning probe and turntable. The angle and position of the projector and image detector can be adjusted to avoid the occlusion of measured surface. In measurement, the laser lines are projected onto the blade surface, and detected by the image detector after deformation by surface modulation. And the data detected by the image detector is transmitted to the computer to process. Then the turntable move to the next location to repeat the above process, and the three-dimensional coordinates of the entire blade surface can be measured ultimately.

It is necessary to pay attention to the impact of the measured surface properties that it would generate some interference, for example, the strong surface reflection may result in the entire image gray too close to identify the stripes. And use of color projection can solve the problem with choosing an appropriate color to project depending on the actual. Moreover, the measured surface is not continuous, changes rapidly or block, it also needs to be considered. Finally, the system calibration results, extraction of knife center and image noise and so on have a great influence on measurement accuracy.

The measurement accuracy of laser triangulation is mainly decided by the system calibration accuracy, number of pixels and image processing technology. As a method of high accuracy, in general, the measurement accuracy is up to ±2.5ppm [16], for example, the optical measuring system triple of the Spanish company Nub3d, its accuracy reaches 10um [17].

2.5.4 Application scope and limitations

Laser triangulation method has been widely used in the three-dimensional profile surface measurement with the characteristics of simple structure, large measuring range, a strong anti-interference ability, high measurement accuracy and faster measurement speed. But it is affected by the measured surface color, material, roughness and optical properties greatly. And the measurement accuracy and measurement speed conflict, it is difficult to improve simultaneously.

Downloaded from SPIE Digital Library on 19 Oct 2010 to 115.154.100.175. Terms of Use: http://spiedl.org/terms

3. CONCLUSIONS

The development of blade profile measurement depends on the requirement of measurement accuracy, efficiency and cost. In conclusion of above methods, each method has its own characteristics and scope of application, but also weaknesses, and there cannot be a method applied in any occasion with good application. Now the characteristics and scope of application of these methods are summarized in table 1.

Table 1 Comparison of different measurement methods

Method		Accuracy	Acquisition time	Range	Cost
Coordinate measurement machine		1um, or better	Long	Middle	Most expensive
Optical theodolite		10^{-5}	Depends on number of points	Large	Common
Three-dimensional photography		10ppm	Depends on number of points	Large	Common
Laser interferometry	laser interferometer displacement sensor	Nanoscale	General	Small	Expensive
	interference fringe projection method	10ppm	Fast	Middle	Expensive
Laser triangulation method		±2.5ppm	Fast	Large, cost of Lower accuracy	Expensive

From the perspective of the measurement demand and technological developments, the development of blade profile measurement technology will follow these aspects:

(1) Non-contact and large-size complex surface measurements. Non-contact measurement can avoid the impact or even breakage to the measured surface, and the blade is usually large and complex. However, the increase of measurement range will lead to measurement efficiency drop, while if the measuring efficiency is guaranteed, the measurement accurate must descend. Thus, the precise and rapid measurement of large size complex surfaces is a main issue of current research.

(2) The high-precision and high-efficiency measurement. The profile or surface quality of blade directly affects the performance of turbo machinery, while the measurement efficiency affects the processing efficiency of blade. The three-dimensional profile measurement of blade with a certain degree of measurement precision and efficiency is another direction of current research.

(3) Automation, integration with product lines. In order to reduce the manual or environmental impact, the measurement system will integrate with the machine and to be automated. And the on-line detection is an important means to improve production efficiency.

(4) The integration of a variety of measurement techniques to meet measurement needs of the integral impeller with complex structure.

With developments of science and technology, more new and advanced technologies will be applied in the three-dimensional surface measurement. It will compensate the shortcomings of the above-mentioned methods, and improve the measurement accuracy or efficiency in order to meet different measurement needs finally.

REFERENCES

1. Hui-Chin Chang, Alan C. Lin. Automatic inspection of turbine blades using a 3-axis CMM together with a 2-axis dividing head. Int J Adv Manuf Technol. (2005)26.
2. E. Savio, L. De Chiffre. An artefact for traceable freeform measurements on coordinate measuring machines. Precision Engineering. vol. 26 (2002).
3. Wang Jinjiang, Di Xu, Jin Sukun, Yang Zhiwen. Industrial measurement system based on an electronic theodolite and precision analysis. Acta Armamentarii. Vol.23, No.3, 2002.
4. Wang Jin-jiang, Jin Su-kun, Di Xu et al. Application of Theodolite Measuring System in Industrial Measurement. Opto-Electronic Engineering. Vol.30, No.1, 2003.
5. Tao Chuan-hai. Research on blade of hydraulic turbine measurement. Information Technology. 2006(5).
6. Ranade S, Rosenfeld A. Point pattern matching by relaxation. Pattern Recognition, Vol. 12, issue 4, 1980.

Downloaded from SPIE Digital Library on 19 Oct 2010 to 115.154.100.175. Terms of Use: http://spiedl.org/terms

7. Umeyama S. Parameterized Point Pattern matching and its application to recognition of object families. IEEE TRANSACTIONS ON PAITERN ANALYSIS AND MACHINE INTELLIGENCE, Vol. 15 No. 2, 1993.
8. Z. Zhang, R. Deriehe, O. Faugeras et al. A robust technique for matching two uncalibrated images through the recovery of the unknown epipolar geometry. Artificial Intelligence, Vol. 78, No. 1-2, 1994.
9. Liu Jianwei, Liang Jin, Liang Xinhe, Liu Qiang. A Novel Rapid Measurement Approach for Blade of Large Water Turbine. Opto-Electronic Engineering, Vol.36, No.8, 2009.
10. Hong Zhao, Wenyi Chen, Yushan Tan. Phase-unwrapping algorithm for the measurement of three-dimensional object shapes. APPLIED OPTICS. Vol. 33, No. 20, 1994.
11. C. Gregory Hull-Allen, Paul Glenn, John Glenn. Shape measurement using high density, phase shifted, projected fringes. Proc. SPIE, Vol. 3204, 81 (1997).
12. Peisen S. Huang, Qingying Hu, Feng Jin et al. Color-encoded digital fringe projection technique for high-speed three-dimensional surface contouring. Optical Engineering. Vol. 38(6), 1999.
13. Jiahui Pan, Peisen S. Huang, Fu-Pen Chiang. Color-coded binary fringe projection technique for 3-D shape measurement. Optical Engineering. Vol. 44(2), 2005.
14. ROGERA Y. TSAI. Versatile camera calibration technique for high accuracy 3D machine metrology using off the shelf TV cameras and lenses. IEEE JOURNAL OF ROBOTICS AND AUTOMATION. VOL. RA-3, NO. 4, 1987.
15. Zhengyou Zhang. A flexible new technique for camera calibration. IEEE TRANSACTIONS ON PATTERN ANALYSIS AND MACHINE INTELLIGENCE, VOL. 22(11):1330-1334(2000).
16. M. Saadat, L. Cretin. Measurement systems for large aerospace components. Sensor Review. Vol. 22, No. 3, 2002.
17. Nicola D'Apuzzo. Overview of 3D surface digitization technologies in Europe. Proc. SPIE, Vol. 6056, 605605 (2006).

Downloaded from SPIE Digital Library on 19 Oct 2010 to 115.154.100.175. Terms of Use: http://spiedl.org/terms