University of Wollongong
Research Online

Faculty of Engineering - Papers (Archive)

Faculty of Engineering and Information Sciences

2006

Rotational capacity of railway prestressed concrete sleeper under static hogging moment

Sakdirat Kaewunruen
University of Wollongong, sakdirat@uow.edu.au

Alexander Remennikov
University of Wollongong, alexrem@uow.edu.au

http://ro.uow.edu.au/engpapers/318

Publication Details

This peer-reviewed conference paper was originally published as Kaewunruen, S and Remennikov, A, Rotational capacity of railway prestressed concrete sleeper under static hogging moment, in Proceedings of the 10th East Asia-Pacific Conference on Structural Engineering and Construction, 3 - 5 August 2006, volume 5 Construction and Professional Practices, 399-404. Bangkok, Thailand: School of Engineering and Technology, Asia Institute of Technology.

Research Online is the open access institutional repository for the University of Wollongong. For further information contact the UOW Library: research-pubs@uow.edu.au

The Tenth East Asia-Pacific Conference on Structural Engineering and Construction
August 3-5, 2006, Bangkok, Thailand

ROTATIONAL CAPACITY OF A RAILWAY PRESTRESSED CONCRETE SLEEPER UNDER STATIC HOGGING MOMENT

Sakdirat KAEWUNRUEN[1] and Alex M REMENNIKOV[2]

ABSTRACT: Railway prestressed concrete sleeper is an imperative component of ballasted railway tracks. Its main function is to help distribute axle loading to subgrade and formation. By nature, the concrete sleeper is subjected to sagging moment at the railseat zone and to hogging moment at the middle section. Although behaviors of concrete sleepers under static loading have been enormously studied, their rotational characteristic and capacity under such loading have never been reported. The emphases of this paper are placed on the static behavior and rotational capacity of a prestressed concrete sleeper under hogging moment. An Australian manufactured concrete sleeper was used in the experiment in accordance with Australian Standards, AS1085.14. LVDT was mounted at the middle span for measuring the deflection. The inclinometers were installed coincident with rail gauge in order to measure the rotations at those positions. Strains at bottom and top fibres under loading were recorded by strain gages. In this paper, the load-deflection curve of the static four-point loading test is presented. Relationship between hogging moment and gauge rotation is underlined. Criteria of the measure based on wheel/gauge-holding capacity are also discussed for determining the rotational capacity of the concrete sleeper.

KEYWORDS: rotation; railway sleeper or railroad tie; prestressed concrete; static testing; and hogging moment.

1. INTRODUCTION

In recent years, there has been a growing challenge in railway engineering research. Railway tracks have been designed based on a consideration to overcome the heavier load-carrying capacity of the roads and trucks either at the moment or in the future. Usually, ballasted railway track – which consists of rails, sleepers, ballast formation, and fastening systems – is widely constructed for transportation especially in remote area [1]. The railway sleepers play an important role in:

- Uniformly transferring and distributing loads from the rail foot to underlying ballast bed;
- Sustaining and retaining the rails at the proper gauge by keeping anchorage for the rail fastening system; preserving rail inclination; and
- Providing supports for rails; restraining longitudinal, lateral and vertical rail movements by embedding itself onto substructures.

Apparently, the main duty of railway concrete sleepers is to distribute the rolling stocks' axle loads to supporting formation and foundation finally. The axle loading could be considered static or quasi-static when the train speeds are low to moderate [2]. However, indeed the axle loading tends to physically behave as the dynamic impact pulses. This is because of the continual moving ride over track irregularities and increased speeds. These dynamic effects would then deteriorate the engineering

[1] *PhD Candidate, School of Civil, Mining & Env. Engineering, University of Wollongong, Australia*
[2] *Senior Lecturer, School of Civil, Mining & Env. Engineering, University of Wollongong, Australia*

properties of railway tracks' components and undermine the load resistant performance of the railway concrete sleepers [3, 4].

Although the dynamic effects have evidently prevailed over the failures of railway concrete sleepers, most of design criteria are on the basis of the static sectional capacity of the concrete sleepers. Theoretical concepts of strength, ductility, stability, fracture mechanics, and so on, mostly refer to the static behaviors [5]. In addition, the numerical modeling of prestressed concrete sleepers requires the static testing results to validate against each other as can be seen in another work done by Kaewunruen and Remennikov [6]. The convergence of the model over static behaviors and modal analysis results will certainly strengthen the confidence of using the numerical model in accurately predicting the dynamic responses of concrete sleepers under various conditions.

Standards Australia [7, 8] prescribes the conventional analysis and design of railway prestressed concrete sleepers and fastening assemblies. The maximum design flexural moments in sleepers can be statically calculated from the pressure distribution as illustrated in Figure 1. It is found that the maximum positive moment remains at the rail seat, whilst the maximum negative moment occurs at the middle of sleepers. Current design concepts of concrete sleepers relied on permissible stresses has been governed in the 2003 Release [7-10]. The Standard also gives consideration that need not to check sleeper section for stresses other than flexural stresses, e.g. shear, if the design is complied with all clauses in the Standard. For prestressed concrete sleepers, it is found that the influence of the dead load can be neglected and the design load can be expressed by the wheel load alone [11].

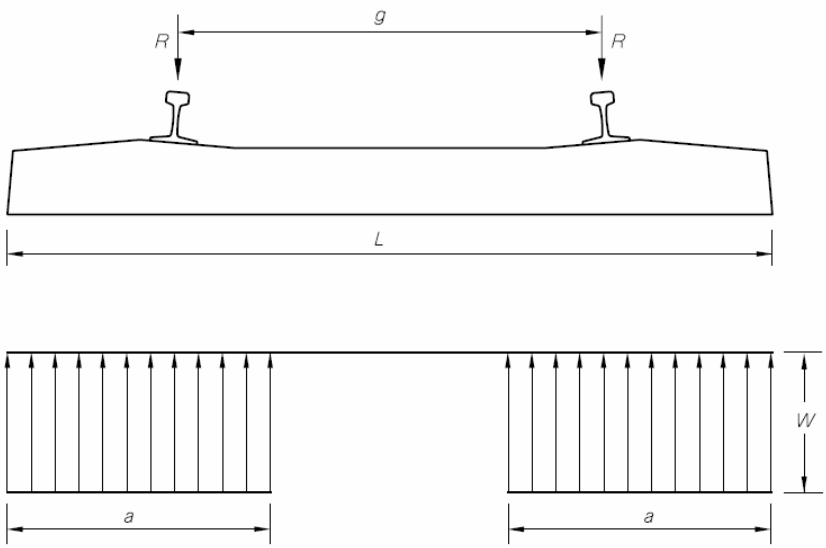

a) Pressure distribution for maximum positive rail seat and centre moments.

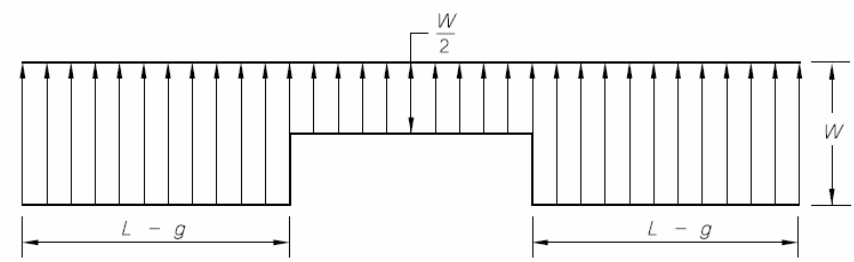

b) Pressure distribution for maximum negative centre moments for track gauge of 1600 mm and greater.

Figure 1. Pressure distribution (after AS1085.14, [5])

Based on Figure 1b, the centre negative moment (M_{C-}) at centre is maximum for track gauge of 1,600 mm and greater and can be read [5]

$$M_{C-} = 0.5\left[Rg - 4Rg\frac{(L-g)}{3L-2g} - \frac{R(2g-L)^2}{6L-4g} \right] \tag{1}$$

For track gauge of 1,435mm, the values of the maximum centre negative moment is based on a uniform distribution of ballast pressure on the sleeper soffit and can be read

$$M_{C-} = R\frac{2g-L}{4} \tag{2}$$

Failure behaviors of prestressed concrete structures under static loading have been enormously investigated [5]. However, most of static investigations on prestressed concrete sleepers have focused on the peak or collapse loads and the related displacements [12]. Understanding rotational mechanism at rail gauge allows improve the design criteria of such components. In this paper, the static testing results are presented, aiming at providing experimental results for the nonlinear finite element modeling [6]. Due to the standardized quality control and a limited number of concrete sleepers, a detailed test covers only the results on the failure behavior, rotational and load-carrying capacities of a railway concrete sleeper at the centre of the sleeper. Although only one prestressed concrete sleeper, supplied by an Australian manufacturer, was employed in the ultimate negative moment test, evidently these ultimate results adhere to those found in the sampling tests by the manufacturer itself [13]. The sleeper specimen was unused and lasted about two years. At the centre section, the negative moment was applied through the four-point-load bending test. Those tests were arranged in accordance with AS1085.14-2003 Prestressed concrete sleepers and AS1085.19-2003 Resilient fastening assemblies [7, 8]. Static performance and failure mode are discussed in addition to the rotational behavior and the residue capacity of concrete sleepers.

2. ULTIMATE MOMENT CAPACITY

Cross section of the test concrete sleeper is presented in Figure 2a. Ultimate moment capacity was predicted by sectional analysis of prestressed concrete section, which was calculated from a computer package, Response-2000. This package relied upon the modified compression field theory for concrete structures [14]. The input data include: the measured initial strain of wires due to prestressing is about 6.70 mm/m, and each prestressing wire has a proof stress of 1860 MPa. The tested compressive strength of concrete is 88.5MPa. Sectional analysis of the specimen for ultimate negative moment of middle section is shown in Figure 2b. It is found that the ultimate negative moment is 53 kNm, while the decompression moment is about 19 kNm.

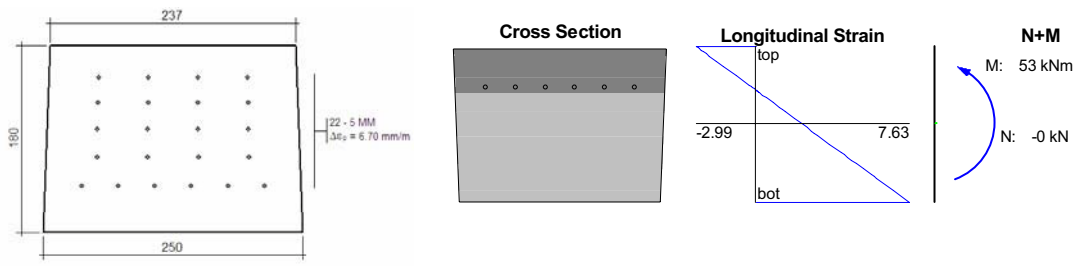

a) Cross section of the specimen

b) Sectional analysis results

Figure 2. Ultimate moment capacity

3. EXPERIMENTS

The test setups were carried out in accordance with Australian Standards: AS1085.14-2003 Prestressed concrete sleepers and AS1085.19-2003 Resilient fastening assemblies [7, 8]. AS1085.14-2003 indicates the boundary conditions, location of supports, and characteristics of loading. The strain measurements on top and bottom fibres at the surface of concrete sleepers are followed from AS1085.14-2003. The concrete sleeper specimen used in the ultimate test has been kindly supplied by an Australian manufacturer within the collaboration of the Australian Cooperative Research Center for Railway Engineering and Technologies (Rail CRC). The total length is about 2,700 mm and the rail gauge is approximately 1,600 mm.

The schematic diagram for the experimental setup of centre negative moment test is shown in Figure 3a. The strain gages were installed 10 mm away from the top and bottom surface at the centre of sleeper. LDVT was used to measure deflection at the load point. The rotations at supports that represent the gauge rotations were measured using the inclinometers. The test had been implemented at small rate displacement control that provides loading rate at approximately 10 kN/min, as prescribed in AS1085.14 that the loading rate should not be greater than 25 kN/min.

After performing the ultimate static test, the concrete sleeper has been drilled for materials testing specimens, in order to investigate the mechanical properties of concrete materials at that condition. The specimens were subjected to uni-directional axial loading tests. The LDVT was used to measure the displacement under loading. Nonlinear stress-strain curves were adopted for the numerical analysis, see ref: [6]. It is found that the average strength of concrete is 88.5 MPa.

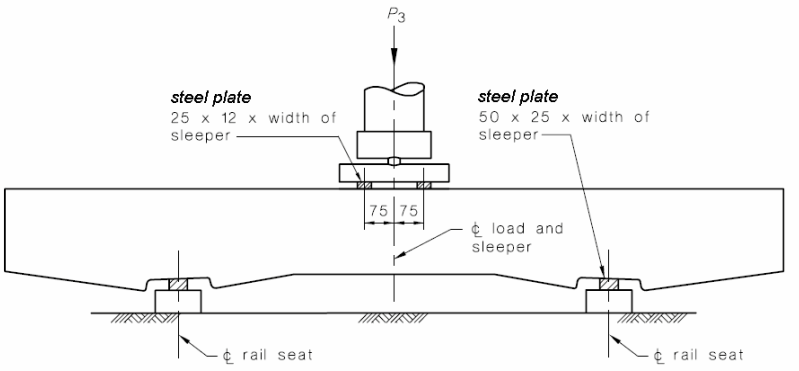

a) Schematic diagramm [7, 8]

b) setup

Figure 3. Static testing setup

4. STATIC PERFORMANCE

The load-deflection and moment-deflection relationships are presented in Figure 4, while the rotational capacity against loading can be seen from Figure 5. The crack initiation load was detected visually during each test as well as determined by the use of the load-deflection relation. Crack initiation was defined as the intersection between the load-deflection relations in stages I and II [12, 13]. This method provides a slightly higher cracking load that from the first deviation point from the linear elastic part of load-deflection relationship. It should be noted that the first cracks are in flexure. The visualized crack initiation load is about 79 kN while the measured one is about 75 kN. The maximum load experimentally found is 133.3 kN, equivalent to bending moment about 45kNm. Comparisons of measured and predicted collapse loads showed good agreement.

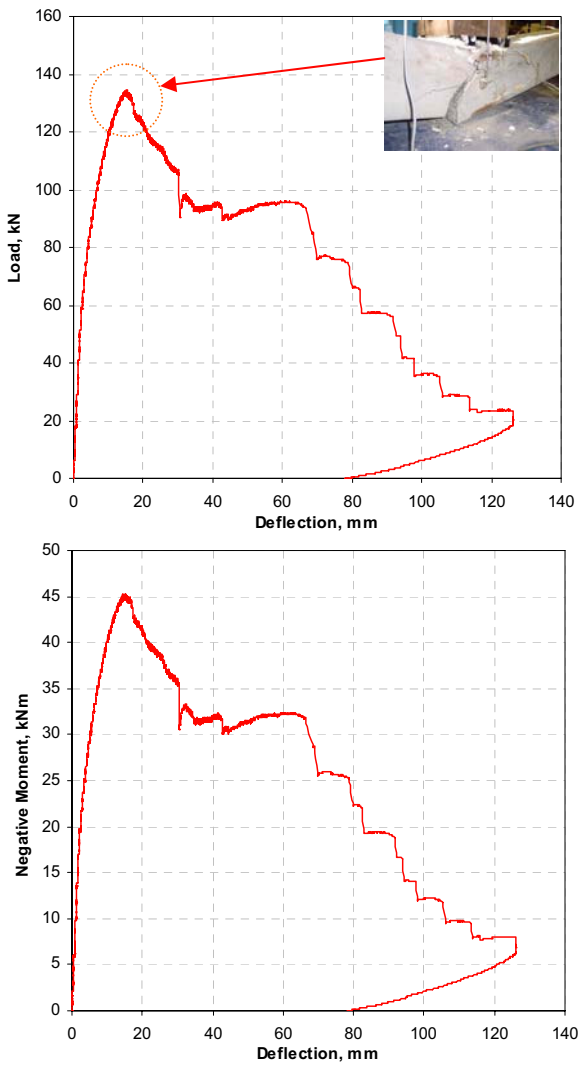

Figure 4. Load and moment - deflection curve

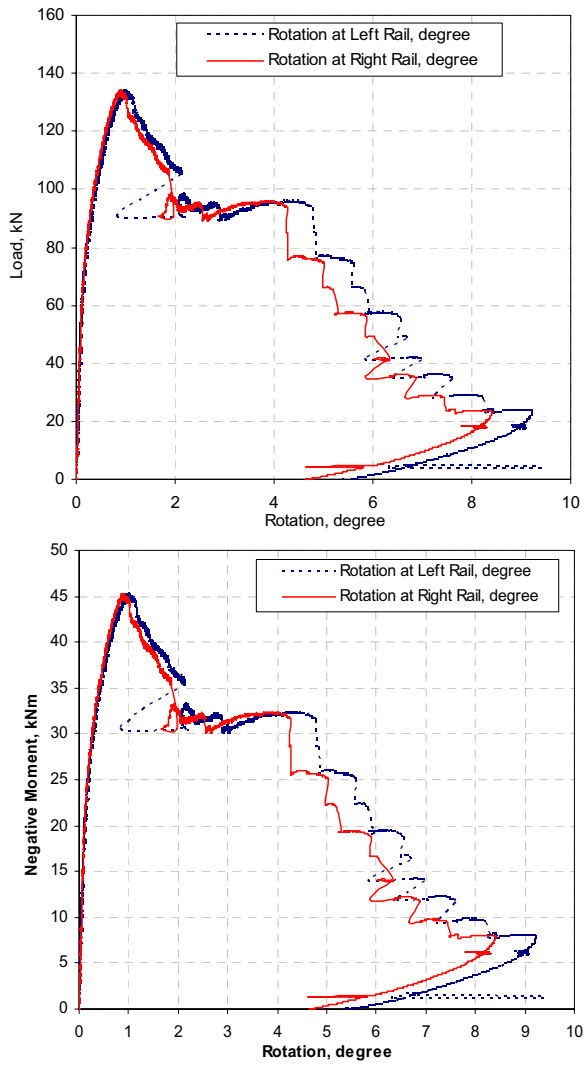

Figure 5. Load and moment - rotation curve

As mentioned, excessive rotation of gauging rails can cause the derailment of rolling stocks. The inclinometers were mounted coincident with both rail supports to measure rotations at rail gauges. Figure 5 shows that the left and right hand side rotations are identical before the sleeper fails. However, after the sleeper fails: the concrete crushes or the prestressing wires yield, it is quite difficult to control the end rotational behaviors in post-failure state. Clearly, the rotations of both sides at peak loading are about 1 degree or 0.01745 rad. It can be seen that from the load resistant patterns, the rotational behavior tends to correlate to the displacement under loading, requiring elaborate modeling.

5. CONCLUSION

In general, rotational capacity of a railway prestressed concrete sleeper plays vital role in its analysis and design because its excessive movement could let to devastating events. To have an understanding into its rotational behavior, this paper firstly presents the rotational capacity of a type of railway concrete sleepers carried out from the ultimate hogging moment test, which simulates the normal loading on tracks. The static results are found in good agreement with those sampling tests done by the manufacturer itself. The additional aim of this paper is to supply experimental results to the nonlinear finite element analysis of the concrete sleeper. From the results, it can be seen that the prestressed concrete sleeper has relatively low rotational capacity. This would not allow the rail gauges misbehaving and not lead to the derailment. Also, it is found that the modified compression field theory can be used to predict the static responses of prestressed concrete sleepers. The predicted result is about 15% higher than the experimental one.

6. ACKNOWLEDGEMENT

This investigation was sponsored by the Australian CRC for Railway Engineering and Technologies (Rail-CRC). The contribution in laboratory from UoW Technical Officers, Alan Grant, Ian Bridge, and Bob Rowland is greatly appreciated. The authors would also like to thank Professor Brian Uy and Ee Loon Tan for their assistance regarding the inclinometers.

7. REFERENCES

1. Kaewunruen, S. and Remennikov, A., "A state-of-the-art review report on vibration testing of ballasted track components", *July-December Research Report*, CRC Railway Engineering and Technologies, Australia, 2004.
2. Gustavson, R., “Static and dynamic finite element analyses of concrete sleepers”, *Licentiate of Engineering Thesis*, Department of Structural Engineering, Chalmers University of Technology, Sweden, 2000.
3. Kaewunruen, S. and Remennikov, A., "In-field dynamic testing and measurements of railway tracks in Central Queensland", *March-June Research Report*, CRC Railway Engineering and Technologies, Australia, 2005a.
4. Kaewunruen, S. and Remennikov, A., "Typical dynamic, impact loading on railway tracks", *June-September Research Report*, CRC Railway Engineering and Technologies, Australia, 2005b.
5. Warner, R.F., Rangan, B.V., Hall, A.S., and Faulkes, K.A., *Concrete Structures*, Addison Wesley Longman, Melbourne, Australia, 1998.
6. Kaewunruen, S. and Remennikov, A., “Nonlinear finite element modeling of railway prestressed concrete sleeper”, *Proceedings of the tenth East Asia-Pacific Conference on Structural Engineering & Construction (EASEC-10)*, Bangkok, Thailand, August 3-5, 2006.
7. Standards Australia, “Railway track material - Part 14: Prestressed concrete sleepers” *Australian Standard: AS1085.14-2003*, 2003a.
8. Standards Australia, “Railway track material - Part 19: Resilient fastening assemblies” *Australian Standard: AS1085.19-2003*, 2003b.
9. Murray, M. and Cai, Z., “Prestressed concrete sleeper: Literature review”, *Report ARA Project Ref: 15250*, Australasian Railway Association Inc, 1998.
10. Remennikov, A., "Experimental and numerical studies for predicting dynamic responses of prestressed concrete sleepers to impact loading", *Discussion paper*, September, CRC Railway Engineering and Technologies, Australia, 2004.
11. Wakui, H. and Okuda, H. (1999), “A study on limit-state design method for prestressed concrete sleepers”, *Concrete Library of JSCE*, Vol. 33, 1999, pp. 1-25.
12. Gustavson, R., “Structural behaviour of concrete railway sleepers”, *PhD Thesis*, Department of Structural Engineering, Chalmers University of Technology, Sweden, 2002.
13. Kaewunruen, S. and Remennikov, A., “Post-failure mechanism and residue load-carrying capacity of railway prestressed concrete sleeper under hogging moment”, *Proceedings of International Conference on Structural Integrity & Failure (SIF-2006)*, Sydney, Australia, September 27-29, 2006.
14. Bentz, E.C., “Reinforced concrete sectional analysis using the modified compression theory”, *Ph.D. Thesis*, Department of Civil Engineering, University of Toronto, Canada, 2000.