University of Wollongong
Research Online

Coal Operators' Conference

Faculty of Engineering and Information Sciences

2004

The Influence of Gas Environment on Coal Properties - Experimental Studies on Outburst Control

N. Aziz
University of Wollongong, naj@uow.edu.au

Ian Porter
University of Wollongong, iporter@uow.edu.au

F. Sereshki
University of Wollongong

Publication Details

This conference paper was originally published as Aziz, N, Porter, I & Sereshki, F, The Influence of Gas Environment on Coal Properties - Experimental Studies on Outburst Control, in Aziz, N (ed), Coal 2004: Coal Operators' Conference, University of Wollongong & the Australasian Institute of Mining and Metallurgy, 2004, 195-201.

Research Online is the open access institutional repository for the University of Wollongong. For further information contact the UOW Library: research-pubs@uow.edu.au

THE INFLUENCE OF GAS ENVIRONMENT ON COAL PROPERTIES - EXPERIMENTAL STUDIES ON OUTBURST CONTROL

Naj Aziz[1], Ian Porter[1] and Farhang Sereshki[1]

ABSTRACT: The volumetric changes in the coal matrix (Coal Shrinkage) and permeability properties under various gas environment conditions were studied in the laboratory. The shrinkage and permeability of coal were examined with respect to changing gas type and confining pressures. The shrinkage tests were carried out in high-pressure bombs while the permeability study was conducted in a specially constructed high pressure chamber. Methane (CH4), carbon dioxide(CO_2), nitrogen (N_2) and a 50% mixture of CO_2/CH_4 gas were used in the study. The tests showed that under different pressure levels gas type affected permeability and shrinkage characteristics of coal.

INTRODUCTION

The composition of the gas stored in coal is highly variable, ranging from pure methane to pure carbon dioxide. These variations are mainly related to the geological structure and depth of the coal deposit. The matrix structure of coal is characterized by both micropores <2 nm and macropores >50 nm in size. The storage of methane in coal structure occurs in two different forms, firstly by sorption into pores and microfractures, and free gas. Almost 95% of stored gas in coal is in the adsorbed state as a monomolecular layer on the surfaces of fissures cracks and cleavages and only a small percentage (<5%) is in free state.The level and easiness of gas sorption from coal seams is influenced by moisture, temperature, structure, porosity and a permeability of coal. Methane and other gases will flow out of the coal pores if there is a pressure gradient acting as a driving force. However, the easiness of gas removal from coal is dependent upon the type of the gas and coal petrography and according to Bartosiewicz and Hargraves (1985) coal has higher a permeability to methane than to carbon dioxide.

Another aspect of gas removal from coal is coal matrix volume change. According to Gray (1987) the shrinkage of coal matrix associated to desorption opens up the cleats and results in an increase in coal permeability. Gray also noted that the degree of coal shrinkage with respect to overburden stresses can also influence coal porosity and permeability. Harpalani and Chen, (1992) showed that there was a linear relationship between the coal matrix volumetric strain and the quantity of gas released. Also St George and Barakat, (2001), in their studies on New Zealand coal, found that the shrinkage coefficients of coal matrix in CO_2 gas sorption was in excess of 4 times of CH_4.

Clearly, their remains considerable interest in evaluating the permeability and coal matrix volume changes in Australian coals. Accordingly, the programme of study reported in this paper is intended to show the influence of gas type and pressure on both the coal permeability and the volumetric changes in an Australian coal. The tests were made under various gas types and gas pressure changes. The permeability and volume change experiments were conducted in separate apparatus specifically designed and constructed for each test.

COAL PERMEABILITY TESTS

The permeability measurement of coal, under different loading conditions and gas type, was studied in purpose designed pressure chamber. A general schematic diagram of this apparatus is shown in Figure 1. Constructed at the University of Wollongong, the equipment incorporated facilities to carry out the following:

[1] School of Civil, Mining and Environmental Engineering, University of Wollongong

- Apply and monitor axial load on coal samples placed in the pressure chamber.
- Monitor strain in coal by using strain gauges mounted on the sample.
- Charge and maintain circumferential gas pressures around the coal sample, and
- Monitor gas flow rate through the coal at suction.

The gas pressure chamber consisted of a rectangular prism of cast iron with removable front and back plates. Its dimensions were 110 mm x 110 mm x 180 mm. The viewing windows were made of 20 mm thick glass in a cast iron frame. Access to the chamber was possible by unbolting the front steel frame with the glass window. A total of 24 bolts secured the frame to the chamber. The chamber was made leak proof by inserting packers between the frame and the box as well as fitting "O" rings around the loading shaft situated at the top of the chamber.

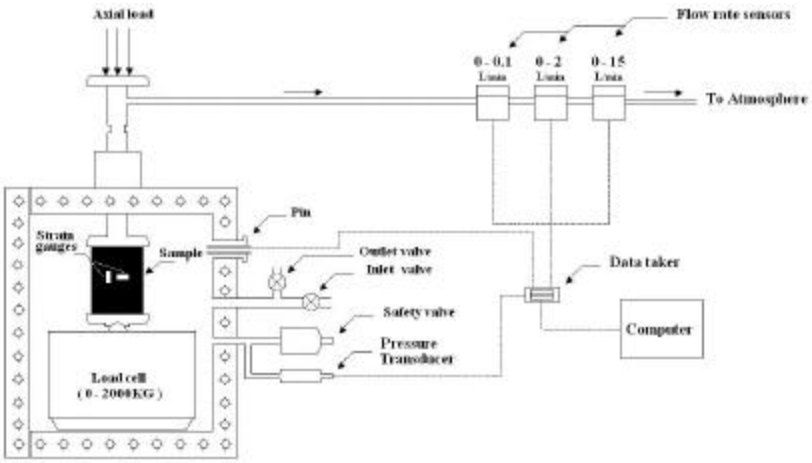

Fig 1 - Schematic layout of the permeability test equipment

Inside the gas pressure chamber were two load plates. The top plate was connected to the universal thrust socket via the central axis, which transferred the applied axial load to the sample. The bottom plate had a hemispherical, concave seat, which rested on a ball bearing at the top of a 40 kN capacity load cell. The bottom plate assemblage served first to transfer the load from the sample to the load cell, and also to pivot and align the coal sample in the event that the top and bottom surfaces of the coal sample specimen were not parallel. Lips on the loading plates prevented any lateral movement of the coal sample during testing.

The 54mm diameter, 50mm long core samples were first centrally drilled with a 5.6 mm hole. Two sets of axial and lateral strain gauges were mounted on the sides of each sample. The coal sample was then placed between the loading plates inside the pressure chamber and axially loaded. Loading of the coal sample was achieved via a universal torque. Gas was then charged into the sealed pressure chamber at a pressure of 3 MPa and maintained constant for a period of one week to allow the coal to be sufficiently saturated .The strain was recorded for this period. It was found that there was a little change in strain after this time. Change in the sample axial and lateral dimensions due to gas sorption were monitored by two sets of strain gauges. Once the sample was fully saturated, the release valve was opened and released gas passed through various flow meters of different flow rates consisting of (a) low flow range 0-100 ml/min, medium range (0-2 l/min) and high range (0-15 l/min). Information from load cell, strain gauges, flow meters and others were monitored in a data-taker data-logger connected to a PC Unit.

The programme of permeability tests consisted of testing each coal sample in a variety of mine gases and under different axial loading conditions and gas pressures. Figure 2. shows the sequence of changing gas pressures and sample loading conditions:

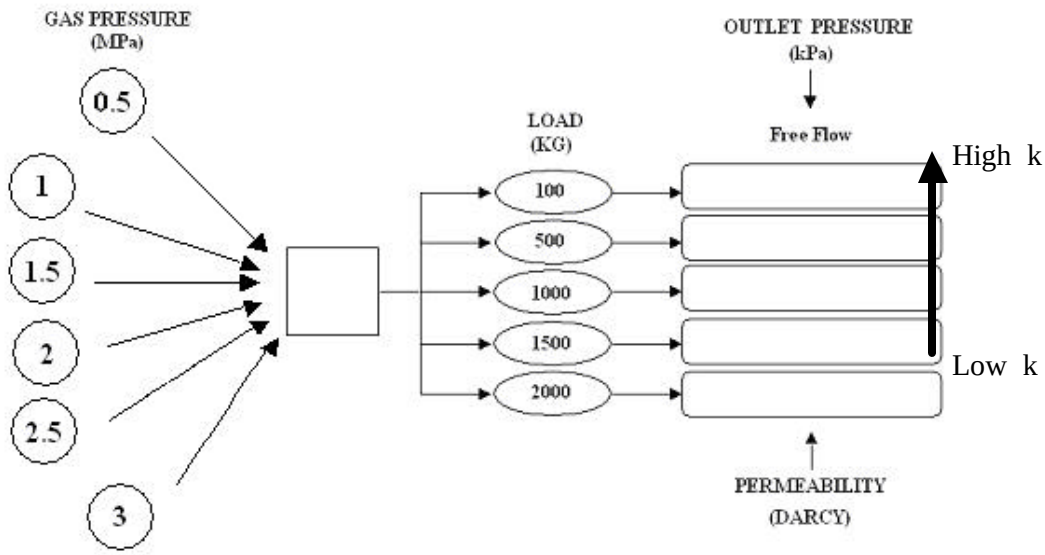

Fig 2- Sequence of changing the pressure and load in the permeability test

The permeability of the sample was calculated using the following Darcy's equation:

$$\mathbf{K} = \frac{m\mathbf{Q}\ln\left(\frac{\mathbf{r_o}}{\mathbf{r_i}}\right)}{p\ell(\mathbf{P_o}^2 - \mathbf{P_u}^2)}$$

where:

K = permeability (Darcy)
Q = rate of flow of gas (cc/sec^{-1})
r_o = external radius of sample (cm)
r_i = internal radius of sample (cm)
ℓ = height of the sample (cm)
P_o = absolute pressure in the chamber (bars)
P_u = absolute pressure in the outlet (bars)
m = viscosity of CH_4 (0.001087)

RESULTS

Figures 3a –3d show the effect of changing the gas pressure (reciprocal) and axial loading conditions on the permeability of coal. Gases used for each test were nitrogen, then methane, carbon dioxide and CO_2/CH_4 (50%, 50%)mixture.

As can be seen, the permeability of coal is highly stress-dependent. Permeability decreased with increasing stress in all gases tested. At the lower mean gas pressures levels the permeability reduction was much more than at higher pressures. It was also observed that the permeability of coal in nitrogen was more than methane (CH_4), carbon dioxide and the CO_2/CH_4 mixture. The lowest permeability was measured for CO_2, which was expected because of the higher adsorption capacity of coal to CO_2. The adsorption of CO_2 takes place mainly in the internal surface of pores and cleats (cracks) of the coal martrix, resulting in lower flow rates. The adsorption capacity of coal for methane was generally lower than carbon dioxide resulting a higher permeability conditions for methane. The permeability of coal to CO_2/CH_4 (50/50 %) mixture was closer to the carbon dioxide than methane. According to Xue and Thomas (1995) varying the ratio of CO_2/CH_4 causes the permeability of coal to change. As it is shown in Figure 3 when the axial load was applied to the coal sample the permeability decreased accordingly as the movement of gas becomes restricted as a result of the applied mechanical load causing the cleats and fractures to tighten or closed (Tarasov, 1960).

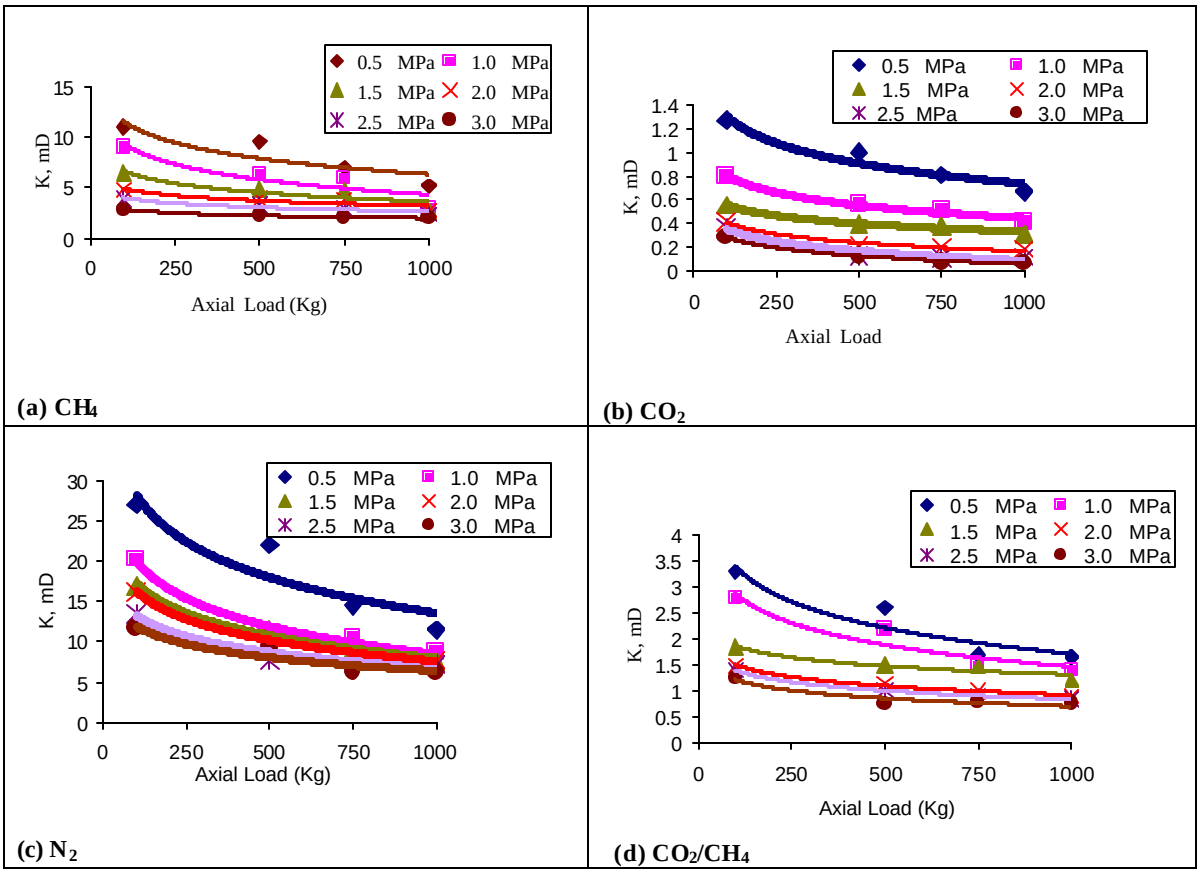

Fig 3 - Effect of stress on permeability of coal in different gases

COAL SHRINKAGE TEST

The volumetric change tests were carried out using a modified pressure bomb of the adsorption/desorption apparatus as described by Lama and Bartosiewics (1982), and later by Aziz and Ming-Li (1999). A pressure transducer, shown in Figure 4, was mounted on each bomb. Coal samples were sealed in gas bombs and pressurized to saturation level at 3 MPa. The sample containers (bombs) were immersed in a water bath, but were isolated from the water bath by copper sleeves to keep them dry. A thermostatically controlled water bath (with a stirrer) allowed the coal samples to be kept at the desired temperature (25 °C).

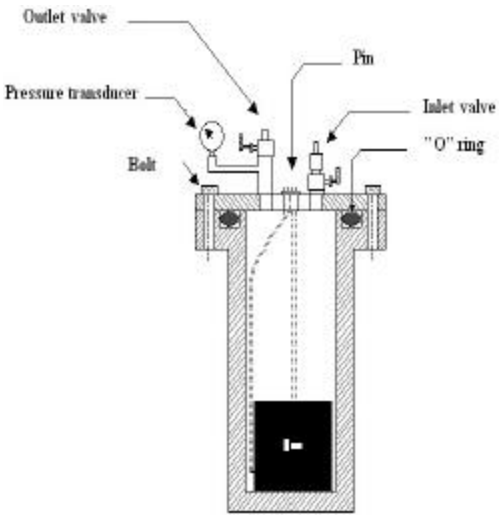

Fig 4 - Sample container (Bomb)

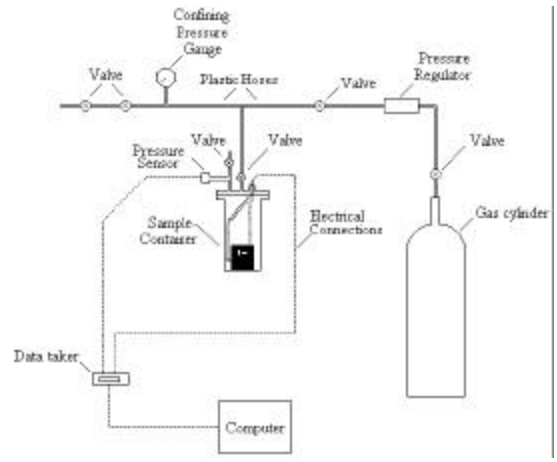

Fig 5 - Schematic diagram of apparatus for testing volumetric change in coal

On the lid of each bomb two types of valves, an isolation and a quick release valve were connected to a gas supply cylinder via a manifold and pressure regulator. To evacuate the gas, a vacuum pump connected, to the manifold, applied suction to the line, expelling any residual gases or air from the system. With this approach, it was possible to bring the pressure to near zero absolute pressure. Pressure release valves enabled the control of pressure and regulated the pressure in each bomb. The whole system capacity was designed to ensure up to 3 MPa absolute pressure and a temperature up to 40°C. The bomb lid was attached to the body by six bolts with the bomb being sealed perfectly using an'O' ring in the top of the bomb. Before, the coal samples were placed in the bombs, four strain gauges were mounted on each sample surface to monitor axial and radial strains on coal size due to gas sorption. The mounting of the strain gauges was carried out in accordance with the International Society of Rock Mechanics (ISRM) standard. As shown in Figure 5, data was collected in a datataker (DT500), which later was connect ed to a PC for recording and analysing. Pressure meters were used to indicate the bombs inlet gas pressures.

Initially, one core sample was placed in each bomb and then vacuumed for the first 24 hours. The bomb was then charged with an appropriate gas type until a maximum pressure of 3 MPa was reached. Once coal was saturated, the gas was then discharged at incremental steps of 0.5 MPa, and the changes in the volume of coal was monitored and recorded in a PC. There were intervals of 2 hours between pressure changes. After finishing one set of tests for a gas type, the bomb was evacuated and the same procedure was repeated for other gases.

Changes in the volume of coal matrix were calculated using the average of the two strains in the axial and radial directions. The shrinkage coefficient (C_m), is defined as the rate of change of coal matrix volume to the change in gas pressure and is given by (Harpalani and Chen,1997):

$$C_m = \frac{1}{V_m}\left(\frac{dV_m}{dP}\right)$$

where:

V_m = Matrix volume (m^3)

dV_m = Change in volume (m^3)

dP = Change in applied pressure (MPa)

C_m = Shrinkage coefficient (MPa^{-1})

The influence of an incremental reduction of gas pressures on a pressurized coal sample of 3 MPa, for Burton coals are shown in Figure 6. The trend in incremental increase in coal column as a result of gas pressure drop is shown. As in pressurization, the level of volume change is greatest in a carbon dioxide environment, followed by the 50% mixture CO_2/CH_4, then CH_4 and then N_2 gas.

RESULTS

Figure 6 shows the relationship between applied gas pressure and volumetric change in coal. The coal sample was initially charged to a maximum pressure of 3 MPa. The changes in coal volume were monitored in increments of 0.5 MPa. As can be seen, the reduction in coal volume is different for different gas medium. A minimal change in coal volume was measured with nitrogen while a CO_2 environment produced the highest volume change. Obviously, the influence of CO_2 reflects an strong affinity of the gas for coal. As coal adsorbs CO_2 more strongly than methane, it is thus likely the high rate of gas storage in coal is accommodated with the increase in coal volume. Clearly the change in coal volume can be more than five fold in CO_2 in comparison with the methane environment. The relative change in coal volume in mixed CO_2/CH_4 environment is between pure CH_4 and CO_2, but the mixture proportions influenced the degree of volume change.

CONCLUSIONS

The experimental study reported in this paper has demonstrated that increasing stress tends to close the cleats and reduce permeability within the coal. Also, the degree of influence is dependent on gas type and pressure. Permeability of coal was found to be highest in nitrogen and lowest in CO_2 gas. Coal samples have been shown to expand on gas sorption and shrink during gas desorption. The level of coal shrinkage was affected by gas type and pressure. Carbon dioxide gas appears to cause the highest volume change and nitrogen has the least effect. This is understandable in view of the fact that coal has higher affinity for carbon dioxide gas than other gases tested. Obviously, the changes to coal permeability and volume are likely to be different for different coals and this issue is currently the subject of an ongoing research by the authors.

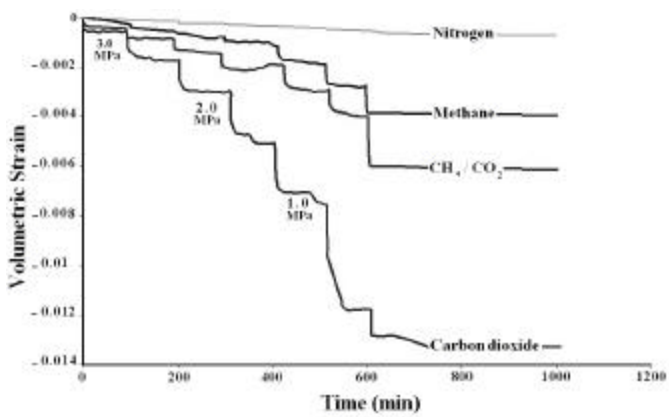

Fig 6 - Volumetric strain for different gases and pressure re ductions at increments of 0.5 MPa

ACKNOWLEDGEMENTS

The financial support provided by the Ministry of Science, Research and Technology of the Iranian Government and Shahrod University of Technology is acknowledged. Acknowledgment is also extended to each of Alan Grant, Ian Laird, Bob Rowland and Nick Mackie, the technical staff, School of Civil, Mining and Environmental Engineering, Faculty of Engineering, University Of Wollongong. The authors also wish to acknowledge the support provided by the management and staff of North Goonyella mine, Queensland, Australia in providing coal samples for the experimental work in this project.

REFERENCES

Aziz, N. I. And Ming-Li, W. (1999) The effect of sorbed gas on the strength of coal-an experimental study, *Geotechnical and Geological Engineering*, Vol. 17, pp. 387-402.

Bartosiewicz, H and Hargraves, A.J, (1985), Gas properties of Australian Coal, Proc. AusIMM, Vol 290 No.1, pp 71-77.

Creedy, D. P. (1991) An introduction to geological aspects of methane occurrence and control in British deep coal mines, *Quarterly Journal of Engineering Geology.* Vol. 24, pp. 209-220.

Gray, I. (1987) Reservoir Engineering in coal seams: part I – The physical process of gas storage and movement in coal seams, *SPE Res. Eng*., pp. 28-34.

Harpalani, S. and Chen, G. (1997) Influence of gas production induced volumetric strain on permeability of coal. *Geotechnical and Geological Engineering*, Vol. 15, pp. 303-325.

Lama, R.D. and Bartosiewicz, H. (1982) Determination of gas content of coal seams. *Proceedings of the symposium on seam gas drainage with particular reference to the working seam*. The Australian Institute of Mining and Metallurgy, Illawarra Branch, Wollongong, May, pp. 36-52.

St. George, J D and Barakat, M A (2001), The changes in effective stress associated with shrinkage from gas desorption in coal, International Journal of Coal geology, No 45, pp 105-113.

Trasaov, BG, (1960), Peculiarities of gas emission in development workings, Ugolj. No 5, May, pp 27-31.

Xue, S. and Thomas, L. J. (1995) Laboratory investigation on the permeability of coal to mixture of methane and carbon dioxide. *Proceeding of the symposium on management and control of high gas emissions and outbursts in underground coal mines. Wollongong,* pp.311-315.