University of Wollongong
Research Online

Coal Operators' Conference

Faculty of Engineering and Information Sciences

2009

An Assessment of the Impact of Stylus Metallurgy on Cerchar Abrasiveness Index

J. Stanford
University of New South Wales

P. Hagan
University of New South Wales

Publication Details

This conference paper was originally published as Stanford, J & Hagan, P, An Assessment of the Impact of Stylus Metallurgy on Cerchar Abrasiveness Index, in Aziz, N (ed), Coal 2009: Coal Operators' Conference, University of Wollongong & the Australasian Institute of Mining and Metallurgy, 2009, 348-355.

Research Online is the open access institutional repository for the University of Wollongong. For further information contact the UOW Library: research-pubs@uow.edu.au

AN ASSESSMENT OF THE IMPACT OF STYLUS METALLURGY ON CERCHAR ABRASIVENESS INDEX

Julian Stanford[1] and Paul Hagan[1]

ABSTRACT: The Cerchar test is increasingly being used as a method to assess the abrasivity of rock in drilling and machine mining applications. A study was undertaken to determine the effect of changes in the metallurgy of the steel styli that is used in the test procedure on the Cerchar Abrasiveness Index (CAI) value. The study involved testing seven different metal types heat treated to the same hardness level and one steel type at nine different hardness levels.

The study found there was little change in the CAI value with different steel types however hardness of the steel styli was found to affect the CAI value. CAI varied inversely with hardness of the steel styli.

INTRODUCTION

From the time of its earliest development in the mid 1960s, the Cerchar Abrasiveness Index (CAI) test has gained increasing popularity as a means of assessing the abrasivity of rock. This is in part due to it being a simple, fast and effective method of measuring and comparing the abrasivity of different rock samples (Michalakopoulos *et al,* 2006). The test has found common use within the mining and tunnelling industries to estimate wear rates and cost of equipment replacement. Indeed, the Cerchar test is now considered by some as one of the 'standard' parameters for hardrock classification (Plinninger, Kasling and Thuro, 2004).

Over the years, the Cerchar test has been subject to significant study especially with respect to what effect test conditions and the geotechnical properties of rock might influence test results (Suana and Peters, 1982; Al-Ameen and Waller, 1994). One test parameter that has been subject to some debate is the metallurgy of the steel stylus (sometimes referred to as the 'pin' or 'needle') used in the Cerchar test, particularly with respect to its hardness. Currently there is no one standard that has been unanimously adopted and variants to the test continue to be used making comparison of results somewhat tenuous. Indeed, classifying results according to CAI might be misleading without knowing the precise specifications of the stylus used in the test.

This paper presents the results of a study that examined the effect of material properties and composition of the steel stylus on CAI test results. In particular, the study examined metal grade of the steel and its hardness.

THE CERCHAR TEST

The Cerchar test, and associated CAI, was developed at the Laboratoire du Centre d'Études et Recherches des Charbonnages de France (CERCHAR). The test was developed at a time of increasing mechanisation in the coal mining and tunnelling industries and with it a need to estimate likely production rates and operating cost in different rock conditions with different scales and type of equipment. A method of determining the abrasivity of rock is one important parameter needed in this estimation.

The importance of abrasivity is that it is directly related to the degree of wear that mining, tunnelling and drilling equipment such as roadheaders, longwall shearers and continuous miners is subjected (West, 1989; Atkinson, 1993).

The Cerchar test, for which a schematic of the apparatus is shown in Figure 1, involves scratching a steel stylus (annotated as Item 5 in Figure 1) under an applied static load of 70 N (Item 6), 10 millimetres across a rock surface that is held in place by a clamp (Item 1). Before each test, the tip of the stylus is sharpened to achieve a conical tip angle of 90°. Usually the test on each rock sample is

[1] *The University of New South Wales (UNSW), Sydney*

repeated between three and six times, each time with a sharpened stylus. The length of the resulting wear flat on the stylus is measured under a microscope. The length is converted on the basis that a 0.1 mm wear flat equates to 1 CAI unit and the average of the replications is calculated and reported. The CAI value ranges in magnitude between zero and seven.

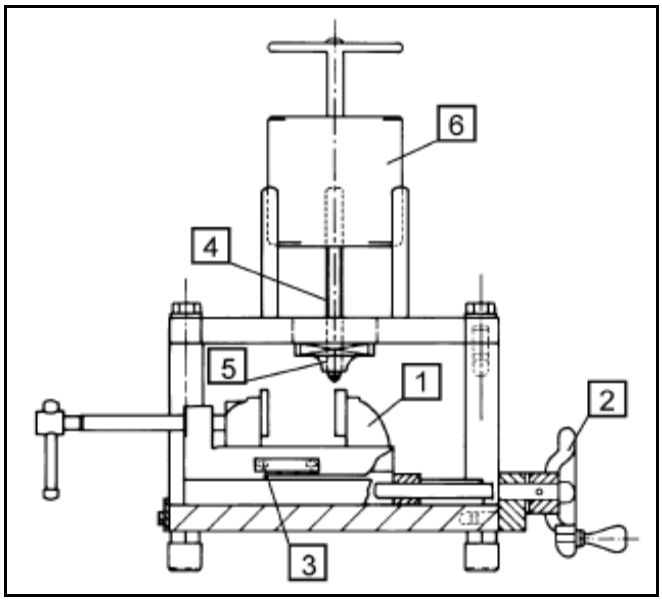

Figure 1 - Cerchar apparatus (after West, 1989)

The meaning attached to the value of CAI in terms of the degree of severity of abrasivity is summarised in Table 1.

Table 1 - Criteria for the Cerchar Abrasiveness Index

CAI value	*Category (after CERCHAR, 1986)*	*Category (after Michalakopoulos et al, 2006)*
0.3 – 0.5	Not Very Abrasive	Very Low Abrasiveness
0.5 – 1.0	Slightly Abrasive	Low Abrasiveness
1.0 – 2.0	Medium Abrasiveness to Abrasive	Medium Abrasiveness
2.0 – 4.0	Very Abrasive	High Abrasiveness
4.0 – 6.0	Extremely Abrasive	Extreme Abrasiveness
6.0 – 7.0	Quartzitic	-

STEEL STYLI METALLURGY

While the geometry of the steel stylus and the testing procedure are well documented and accepted, specifications of the steel stylus are not. CERCHAR (1986) specified a steel strength equivalent to an Ultimate Tensile Strength (UTS) of 2000 MPa. It is assumed that the criteria presented in Table 1 reflect this property of the steel stylus. West (1989) claimed, however, that steel treated to a Rockwell C Hardness (HRC) number of 40 gave the most representative results with respect to CAI, despite 2000 MPa reflecting a much higher steel hardness of HRC 57. Differences in some of the material properties of steel between these two standards are highlighted in Table 2. Given the extent of the difference in material properties of steel between these two specifications, it is likely that this would translate to a significant difference in wear of the stylus and hence magnitude of the CAI value.

Table 2 - Differences in material properties between two specified steel types

after	*UTS (MPa)*	*Rockwell Scale (HRC)*	*Vickers (DPH HV/10)*	*Brinell (BHN 3000kg)*	*Scleroscope*
CERCHAR (1986)	2000	57	633	595	76
West (1989)	1255	40	392	371	54

As the Cerchar test is in effect a measure of the difference in the relative hardness between steel and rock, the level of hardness of the steel stylus would be crucial to the amount of wear on the stylus and resulting CAI value. So long as the material properties of the stylus remain undefined, questions will remain about the significance of test results. Indeed it has been acknowledged that there is a problem with different steel qualities being used around the world (Plinninger, Kasling and Thuro, 2004; Verhoef, 1997).

Research Objectives

The aim of the study was to improve the usefulness, accuracy and knowledge of the Cerchar test by examining what effect changes in steel type and hardness have on the CAI value.

Selected Materials

Styli Metals
A total of seven different steel types were selected for the study. These were chosen to represent a cross-section of the steel types likely to be used for Cerchar testing in different laboratories around the world. They were selected in consultation with M. F. Dippert Pty Ltd and the steel sourced from Bohler-Uddeholm Australia.

In addition, a further nine styli were machined from Silver Steel heat treated to hardness levels of HRC 15 (untreated), 24, 29, 35, 40, 45, 50, 55 and 60 respectively. The properties of the various steel styli used in the study are summarised in Table 3 and a sample of the machined styli is shown in Figure 2.

Table 3 - Properties and composition of the different steel used as styli in the study

type	*stylus hardness (HRC)*	*use*	*typical analysis (%)*						
			C	*Si*	*Mn*	*Cr*	*Mo*	*V*	*W*
Silver Steel	50	dimensionally stable steel used in cutting tools	0.95	0.25	1.1	0.55	-	0.55	0.1
H13	51	hot work tool steel	0.39	1.0	0.4	5.2	1.4	0.9	-
M340	52	plastic mould tool steel	0.54	0.45	0.4	17.3	1.1	0.1	-
CALMAX	52	plastic mould and cold work steel	0.6	0.35	0.8	4.5	0.5	0.2	-
SVERKER 3	52	cold work tool steel	2.05	0.3	0.8	12.7	-	-	1.1
Rigor	52	cold work tool steel	1.0	0.3	0.6	5.3	1.1	0.2	-
S600	55	high speed steel	0.9	0.25	0.3	4.1	5.0	1.8	6.4

Figure 2 - Sample of some of the steel styli used in the study

Rock Sample
Mt White Sandstone sourced from Gosford Quarries Pty Ltd was used as the test rock in the study. It is argillaceous quartz sandstone of the Triassic period having a density of 2.3 t/m^3 and a UCS (dry) of 57 MPa. The silica grains in the sandstone were irregular in shape and varied in size between 0.13 and 0.52 mm. Samples of the rock were cut into cubes using a diamond blade saw that provided a flat, uniform surface for testing. The samples were air-dried prior to testing.

EXPERIMENTAL PROGRAM

The study consisted of two parts using the test apparatus as shown in Figure 3.

- Part A examined the effect of steel type (grade, composition, etc) using seven different metal types at a constant hardness.
- Part B examined the effect of styli hardness at nine different levels with the one steel type, Silver Steel.

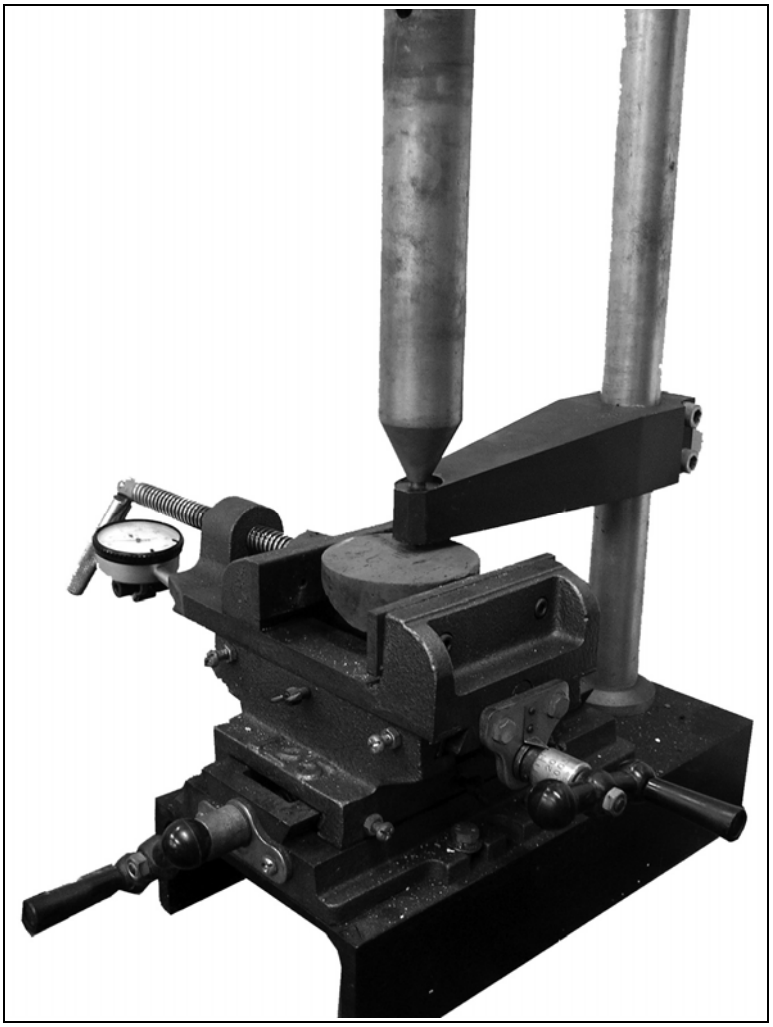

Figure 3 - The Cerchar test apparatus as used in the study

In this way the effect of steel type and hardness were isolated as the testing variables with a total of 16 different steel styli used in the study.

Each test followed the usual Cerchar procedure as discussed earlier and as depicted in Figure 4. In order to ensure a high level of confidence in the test results, the test with each stylus was repeated seven times. The mean CAI value was calculated on the basis of only five replications with the highest and lowest outlier measurements excluded from each calculation.

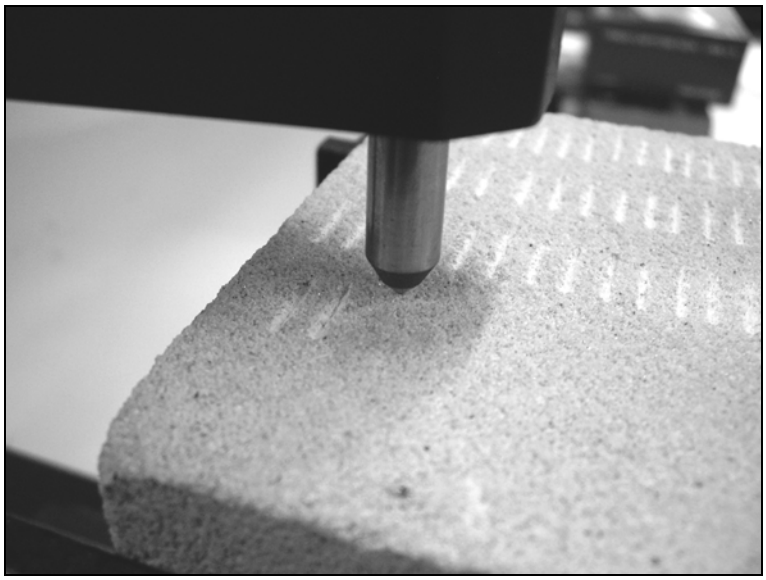

Figure 4 - Test arrangement with pin ready to be scribed across rock surface

RESULTS

Variable Steel Type / Constant Hardness

Results of the test work involving seven different steel types are summarised in Table 4 and the results are graphed in Figure 5

Table 4 - Summary of results of different steel types

steel type	*steel hardness (HRC)*	*CAI*		*coefficient of variation*	*deviation from mean CAI*
		mean	*s.d.*		
Silver Steel	50	1.89	0.12	6.2%	-4.2%
H13	51	2.03	0.26	12.7%	+2.7%
M340	52	1.89	0.15	7.9%	-4.0%
CALMAX	52	1.92	0.15	7.8%	-2.7%
SVERKER 3	52	2.08	0.11	5.3%	+5.3%
Rigor	52	2.08	0.11	5.3%	+5.3%
S600	55	1.84	0.23	12.4%	-6.7%
mean		***1.97***	***0.17***	***8.6%***	

Note: Coefficient of Variation (CV) is a normalised measure of the dispersion of a probability distribution and is defined as the ratio of standard deviation to the mean of a sample often expressed as a percentage.

The mean CAI for the seven steel styli was 1.97. The amount of deviation from this CAI value for each individual stylus was comparatively small being at most only 6.7% and in two instances only 2.7%. The smallest CAI was with the S600 stylus which was by far the hardest of the styli tested at HRC 55, however, as the other styli were within ± 1 HRC no other meaningful conclusion can be made concerning steel hardness from this part of the study. The magnitude of these minor levels of deviations becomes significant when cognisance is taken of the heterogeneity of rock and the variability normally exhibited in its properties. For example to reflect the heterogeneity of rock albeit of a different though allied property, Roxborough (1987) reported the variability in compressive strength as measured in terms of the coefficient of variation for sandstone to be 19.8% and for many sedimentary rocks to be slightly higher at 21.7%. In this study the coefficient of variation in CAI was much lower and ranged between 5.3% and 12.7% with an average of 8.6%.

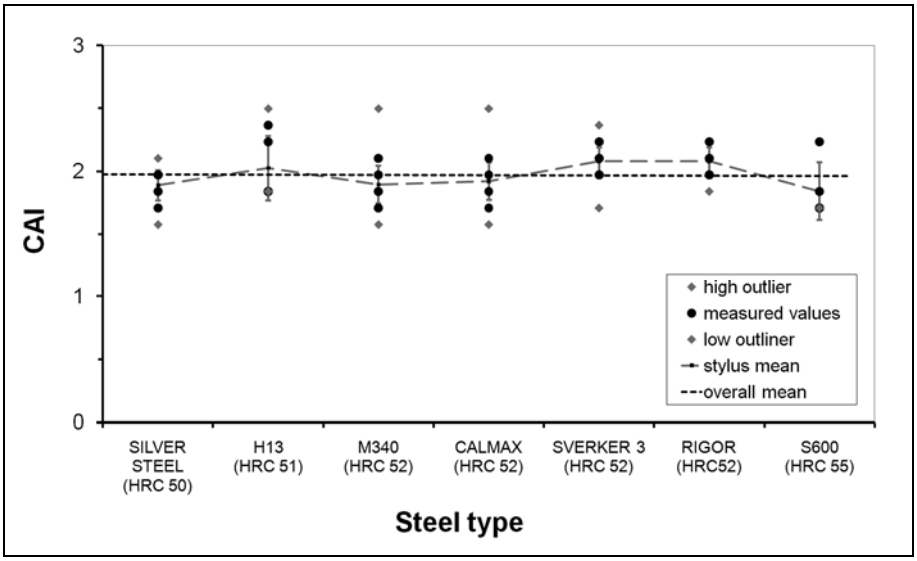

Figure 5 - Effect of steel type on CAI value at constant stylus hardness

Hence CAI does not appear to be significantly affected by changes in steel type of the stylus. It could also be concluded that considering the number of tests that were undertaken with different stylus there does appear to be a reasonable level of repeatability in the test results.

While a constant nominal hardness of HRC 52 was targeted, the actual hardness of the seven different steel styli varied between HRC 50 and 55. This small variation in hardness may contribute in small part to the small variations observed in measured CAI.

Variable Hardness / Constant Steel Type

In terms of the variation in CAI with hardness of the stylus, it was found that CAI decreased with hardness. Moreover considering the range of hardness values investigated it appears that CAI decreases in a linear manner with hardness as is shown in Figure 6. The equation for the line of best fit taking into account all of the readings but excluding the highest and lowest outliers was found to be:

$$CAI = -0.0766\ HRC + 5.80$$

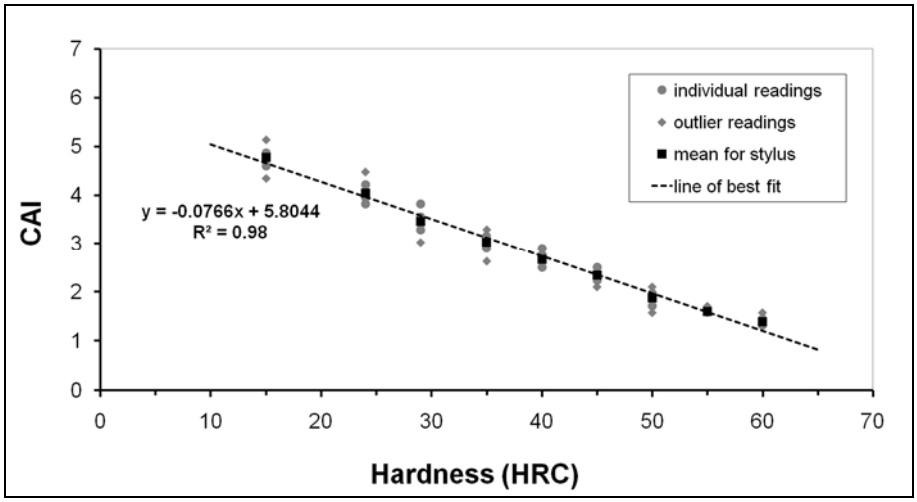

Figure 6 - Effect of steel hardness on CAI with a constant steel type

The correlation co-efficient (R^2) for the data set was 0.98 indicating a good correlation between steel hardness and CAI value. This is also reflected in the small differences between the measured CAI and predicted CAI of at most 0.18 at each level of hardness as listed in Table 5.

Table 5 - Summary of results of changes in steel hardness on CAI

Hardness (HRC)	*CAI*		*coefficient of variation*	*deviation from trend line*
	mean	*s.d.*		
15	4.77	0.30	5.2%	0.13
24	4.04	0.24	5.9%	0.08
29	3.46	0.29	8.4%	-0.12
35	3.03	0.23	7.5%	-0.09
40	2.67	0.18	6.8%	-0.07
45	2.35	0.16	6.8%	-0.01
50	1.88	0.18	9.7%	-0.10
55	1.60	0.05	3.1%	0.00
60	1.39	0.10	7.4%	0.18

Interestingly, although the variance in the data set for each stylus as measured in absolute terms by the standard deviation tended to decrease with hardness, in relative terms there was little significant change reflected in the coefficient of variation.

ANALYSIS

In testing the effect of metal type it was found that the hypothesis of equal means holds. In other words considering the different steel types tested, No significant effect on Cerchar test results could be attributed to changes in steel type of the stylus.

The highly linear relation observed between CAI values and styli hardness is significant as it allows a simple mathematical model to be determined linking the two variables. In this way, an accurate estimation of CAI as a function of styli hardness may be possible. The significance of this is that it may enable a result to be 'normalised' to a standard stylus hardness for reporting and comparison purposes, for example standardised to either/or specification of HRC 57 (2000 MPa), HRC 40 or some other hardness.

Results of the study suggest that it might be feasible to vary the hardness of the stylus according to the rock being tested. For example, to use a lower hardness stylus when testing softer rocks and a higher hardness stylus when testing harder rocks. This could prove important in several ways. First it could improve the testing accuracy by restricting the length of the wear flat within predefined limits. Secondly, by adjusting stylus hardness the range of rock types over which the CAI test can be usefully applied could be extended. For example softer rock types tend to result in very little if any wear flat when using a very hard stylus.

CONCLUSIONS

The Cerchar test is increasingly being used as a means of assessing the abrasivity of rock samples. There has been some concern expressed about the reliability of the test results especially between different testing laboratories due to the lack of a precise specification of the steel stylus used in the test. The objective of this study was to investigate the impact of changes in some material properties of the steel stylus on the Cerchar test results.

The study found over the range of steel types used as a stylus in the Cerchar test that there was little significant variation in the mean calculated value of Cerchar Abrasiveness Index (CAI). While steel type of the stylus was varied, it was endeavoured to hold hardness constant in the first part of this study at a level somewhere between that specified by CERCHAR (1986) of 2000 MPa and West (1989) of Rockwell Hardness C (HRC) 40. The actual hardness of the seven steel styli varied slightly between HRC 50 and 55 being equivalent to a UTS ranging between 1606 and 1889 MPa. This indicates that selection of stylus for Cerchar testing based on steel type alone is unlikely to have any significant effect of the level of calculated CAI.

In terms of varying the hardness of the stylus, the study found the value of CAI decreased with steel hardness. Over the range of hardness tested from HRC 15 to 60, the value of CAI varied inversely with steel hardness. In all, nine levels of hardness were tested. Consequently hardness of the stylus is

a critical parameter that affects the CAI value for a rock. In light of this it would be prudent when reporting results that hardness of the stylus used in the test work also be reported with the test results.

Based on these findings, the following comments are made with respect to the Cerchar test.

- At least three styli with different hardness levels should be used in a Cerchar test, preferably with as large a difference in hardness levels as is practical. This would allow the construction of a model indicating the variation in CAI with hardness.
- The material properties of the stylus should be reported together with the CAI results.
- A minimum of five (5) replications of the scratch test provides a reliable estimate of the CAI value of a rock sample though it is preferably to undertake seven replications and eliminate the high and low outliers from the calculation of the mean CAI.
- Although it was found that steel type had little or no effect on CAI, it is suggested that the stylus be made from a tool steel or similar composition that is resistant to any heat effects generated during the grinding process of the stylus tip.
- The steel chosen for styli manufacture should be amenable to heat treatment to a wide range of hardness levels.

ACKNOWLEDGMENTS

The author acknowledges the support of various industry personnel including John Brayebrooke who provided valuable information and insight into the aspects of the Cerchar test. The study was supported by M. F. Dippert Pty Ltd and Gosford Quarries Pty Ltd who provided the machined steel styli and test rock samples respectively.

REFERENCES

Al-Ameen, S, and Waller, M, 1994. The influence of rock strength and abrasive mineral content on the Cerchar Abrasiveness Index, in *Engineering Geology*, 36(3-4)293-301.

Atkinson, R, 1993. Hardness tests for rock characterisation, in *Comprehensive Rock Engineering*, Vol. 3, pp 105-117, (Oxford: Pergamon Press)

CERCHAR, 1986. The CERCHAR abrasiveness index, Centre d'Etudes et Recherches de Charbonnages de France, Verneuil, S (ed).

Michalakopoulos, T, Anagnostou, V, Bassanou, M, and Panagiotou, G, 2006. The influence of steel styli hardness on the Cerchar abrasiveness index value, in *International Journal of Rock Mechanics and Mining Sciences*, 43(2)321-327.

Plinninger, R, Kasling, H, and Thuro, K, 2004. Wear prediction in hardrock excavation using the Cerchar abrasiveness index (CAI), in *Proceedings EUROCK 2004 and 53rd Geomechanics Colloquium*.

Roxborough, F F, 1987. The role of some basic rock properties in assessing cuttability, in *Proc. Tunnels: Wholly Engineered Structures*, April (IEAust: Sydney).

Suana, M, and Peters, Tj, 1982. The Cerchar Abrasivity Index and its relation to rock mineralogy and petrography, in *Rock Mechanics*, 15(1)1-7.

Verhoef, P, 1997. *Wear of Rock Cutting Tools: implications for the site investigation of rock dredging projects*, (A A Balkema: Rotterdam)

West, G, 1989. Technical Note – rock abrasiveness testing for tunnelling, in *International Journal of Rock Mechanics, Mining Sciences and Geomechanics Abstracts*, 26(2)151-160.