University of Wollongong
Research Online

Coal Operators' Conference

Faculty of Engineering and Information Sciences

2009

Ventilation and Gas Extraction Techniques of High Gas Seams in Kazakhstan

D. Mukhamedzhanov
JSC ArcelorMittal Temirtau

S. Baimukhametov
JSC ArcelorMittal Temirtau

A. Polchin
JSC ArcelorMittal Temirtau

Publication Details

This conference paper was originally published as Mukhamedzhanov, D, Baimukhametov, S, Polchin, A, Ventilation and Gas Extraction Techniques of High Gas Seams in Kazakhstan, in Aziz, N (ed), Coal 2009: Coal Operators' Conference, University of Wollongong & the Australasian Institute of Mining and Metallurgy, 2009, 181-184.

Research Online is the open access institutional repository for the University of Wollongong. For further information contact the UOW Library: research-pubs@uow.edu.au

VENTILATION AND GAS EXTRACTION TECHNIQUES OF HIGH GAS SEAMS IN KAZAKHSTAN

Dzhakan Mukhamedzhanov[1], Serghzy Baimukhametov[2] and Aleksander Polchin[3]

ABSTRACT: The execution of gas drainage techniques to degas the high methane content seams, and to allow their safe working, is influenced by the low permeability of the coal seams. The extraction techniques of coal degasification employed are; mining the underlying thin seam before extracting the main thicker target seam; pre-drainage of the target seam, from surface in conjunction with in-seam drainage, both using vacuum extraction and; taking a top lift of the very thick seams. A significant proportion of the liberated gas is also extracted from the goaf area. Several special techniques are employed in managing the goaf gas, including gas extraction from surface boreholes, bleeder drivages and gas drainage from roadways constructed above the extraction seam. Methane removal levels of 60% are achieved through effective methane gas drainage management and control in coal production. These practical measures contributed to increase in methane gas volume available for utilisation to 120 m^3/min.

INTRODUCTION

The Coal Division of ArcelorMittal operates eight underground mines in the Karaganda coalfield in Kazakhstan. The current production of coal is 12 Mt per annum. The working of the coal is constrained by the so called "methane barrier", which manifests itself by a high coal seam methane content at the depths more than 500 m. Most of the mines operate at depths greater than 500 m and working conditions are therefore characterised by high methane release levels at the development and production units of up to 100-150 m^3/min. of pure methane equivalent.

EXTRACTION SEQUENCE

To allow safe extraction of the thick but very gassy K_{12} coal seam, the underlying K_{10} coal seam, which is over 4 m thick, is extracted first. The 7 m thick, K_{12} seam can then safely be mined in two lifts, with a capacity of 10 Kt per day.

The description of this technique by undermining of the K_{12} seam by the K_{10} seam at Abayskaya mine is outlined in detail as follows.

Seam setting

The K_{12} seam is some 440 m below surface. The distance between K_{10} and K_{12} is 55-60 m. At the distance of 30-35 m. from the K_{10} there is a thin seam K_{11} which is 1.0-1.5 m thick. The K_{11} horizon is used as the drainage drive level.

The immediate roof of the seam is medium-hard mudstone, with a thickness of 5.0-8.8 m, which readily caves. Dip angles range between 10 and 26 degrees. Operating seam height of the K_{10} is 4.45 m, with an extracting height is 3.9 m.

Natural gas content of the K_{10} seam, as determined during the original exploration, is 25.7 m^3/ton. There is methane ingress into the goaf of the K_{10} from the overlying K_{12} seam, giving a relative gas emission of 44.70 m^3/t. 80-90% of the total $K_{10,}$ K_{11} and K_{12} gas is extracted during and from the mining of the underlying K10 seam.

[1] *Technical Director Coal Division JSC ArcelorMittal Temirtau*
[2] *Professor D.E, Advisor on Production Modernization and Development Coal Division JSC ArcelorMittal Temirtau*
[3] *Deputy Technical Director Coal Division JSC ArcelorMittal Temirtau, mining*

Gas Drainage methods

Different gas extraction methods and drivages are shown in the following figure: These consist of a combination of in-seam extraction drill holes, goaf holes from surface and an overlying sewer drainage drive.
The trials for goaf drainage, through cross measure drilling, are currently being tried out at the neighbouring mine. The longwall face ventilation is by conventional U-type system, with an intake and return gate roads. The ventilation quantity is 1,500 m^3/min at the face. The methane capture by means of ventilation and degasification is shown in Table 1.

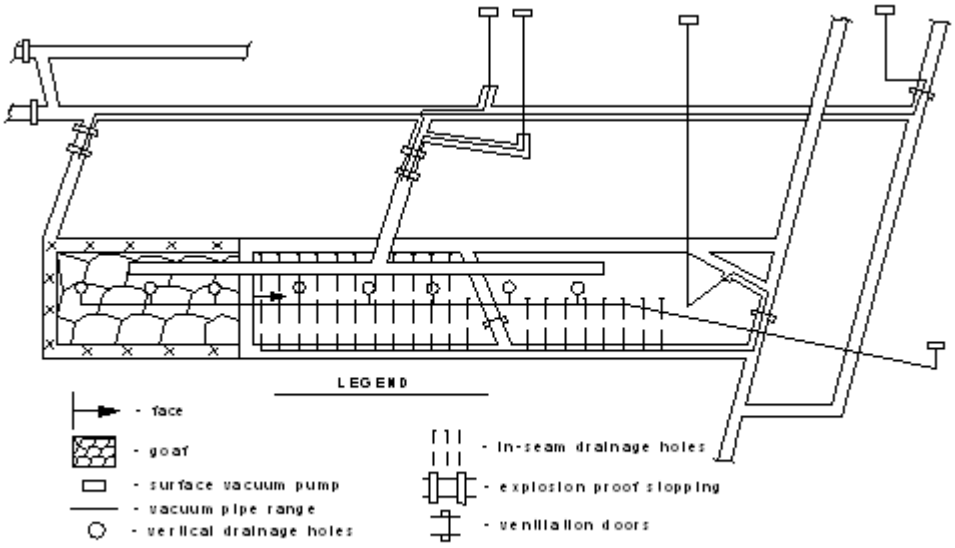

Figure 1 - The draft of methane emission control at Abayskaya mine

Longwall block pre drainage

Preliminary degassing was carried out within the working seam and included:

- preliminary seam pre drainage holes, which are drilled from the intake gate; the distance between holes – 8 m and the length – 120-140 m.; the term of degassing - 268 days;
- progressive advanced seam degassing holes, during or immediately prior to extraction, which are drilled from return gate; the distance between holes – 2 m and the length – 100-120 m.

The practice showed that the most efficient method was advanced degassing holes in the distance of 10 m from face line (the abutment zone in front of production face line); they removed 2.0-2.5 m^3/min.

Goaf drainage

The main part of methane from the longwall goaf was captured by using isolating seal at the return incline K_{10} (73.6 m^3/min pure methane), i.e. more than 50% of total methane content of area. 15 vacuum pumps (HB-50) were in operation for this method of degassing to provide safe work in the production unit. Two gas pipelines (402 mm diameter) were connected from the seal to three main wells (two 325 mm diameter well and one 500 mm diameter).

The methane content in the face and production unit was constantly in the range of 0.9-1.1% under such methane management method. The gas content exceeded the allowable standard in the goaf at the distance of 5 m from face end. The efficiency of this method began to decrease after 200 m of face advance and methane content increased up to 1.5% at the face end. The situation at the production face has changed when the faceline reached the gas drainage gate. The gas drainage gate is driven in the overlying thin seam K_{11} at a distance of 30-35 m from working seam K_{10}. The development rate was not limited by gas factor.

Table 1 - methane capture by means of ventilation and degasification

Methane recovery methods	Methane capture, m^3/min			Effectiveness coefficient of degasification
	Methane-air mixture Q_{mix}, m^3/min	**Methane purity K, %**	**Methane capture in terms of 100% Q_{CH4}, m^3/min**	
Per face output	4500 tonnes			
Ventilation			39.0	
Return	**2100.0**	**0.9/1.1**	**21.0**	
Isolated methane withdrawal by means of mine depression	**100.0**	**18.0**	**18.0**	
Methane content in upper face end		**0.9/1.5**		
Degassing			98.0	0.78
1. Vertical degassing wells	**40.6**	**60.0**	**24.4**	**0.17**
2. From seals of mine roadways	**408.9**	**18.0**	**73.6**	**0.52**
Total methane content of the section			**137.0**	

The efficiency of the degassing method of gas emission source, during coal seam mining, is dependent on accurate determination of geomechanical processes in the mining area. The efficiency of the gas drainage gate technique was dependent on its right location, taking into consideration all rock movements and faults. The major point during this degassing method designing is the determination of expected volumes of methane emission from the undermining seam (K_{12}). Methane flow rate from undermining seam is dependent on the active gas emission area of undermining seam, its natural and residual gas content.

In accordance with calculations, the actual methane release rates from undermining seam K_{12} showed that it is required to increase air-methane mixture in the gas drainage gate for isolated methane withdrawal. Therefore two gas pipelines (402 mm diameter) were applied to isolating seal. The air-methane mixture was pumped out through two main degassing wells (325 m diameter) by means of six vacuum pumps. However, the increased gas emission from the undermining seam occurred mainly in the active movement area, which was limited by the critical angles of movement and rock relief. Thus, the optimal location of gas drainage gate, providing maximum efficiency, was at the distance of 1.5-1.6 length of face from the return gate. By using this degassing method for production section 32 K_{10}-N at Abayskaya mine the calculations defined the gas drainage gate location at 30 m from the return gate and 30-35 m from the mining seam.

Gas balance

The methane capture by ventilation and degassing is shown in Table 2. Methane removal levels of 60% were achieved by using the methane management and control at the production unit through the gas drainage gate K11. This allowed the increase in methane volume available for utilization (concentration 25%) to 120.5 m^3/min (or 75% of total methane saturation of unit). The maximum methane concentration in the return was no more than 0.9% (per face per day output of 2000 t); the concentration of methane in the upper face end was lower 1.0%.

Table 2 - methane capture by ventilation and degassing

Methane capture methods	**Methane capture, m^3/min**			**Effectiveness coefficient of degasification**
	methane-air mixture Q_{mix}, m^3/min	**methane purity K, %**	**methane capture in terms of 100% Q_{CH4}, m^3/min**	
Per face output	5500 tons			
Ventilation			16.8	
Return	**2100.0**	**0.8/0.9**	**16.8**	
Methane concentration in lower face end		**0.7/0.8**		
Degassing			142.1	0.89
1. Vertical degassing wells	**36.5**	**55.0**	**20.1**	**0.12**
2. From seal of return incline K_{10}	**225.2**	**8.0**	**18.0**	**0.10**
3. Isolating seal of gas drainage gate K_{11}	**179,3**	**56.0**	**100.4**	**0.63**
Total methane content of the section			**158.9**	