University of Wollongong
Research Online

Faculty of Informatics - Papers (Archive)

Faculty of Engineering and Information Sciences

2004

Space time spreading with modified Walsh-Hadamard sequences

P. Vial
University of Wollongong, peterv@uow.edu.au

B. J. Wysocki
University of Wollongong, bjw@uow.edu.au

I. Raad
University of Wollongong, ibrahim@uow.edu.au

T. A. Wysocki
University of Wollongong, wysocki@uow.edu.au

Publication Details

This paper originally appeared as: Vial, P, Wysocki, BJ, Raad, I & Wysocki, TA, Space time spreading with modified Walsh-Hadamard sequences, IEEE Eighth International Symposium onSpread Spectrum Techniques and Applications, 30 August-2 September 2004, 943-946. Copyright IEEE 2004.

Research Online is the open access institutional repository for the University of Wollongong. For further information contact the UOW Library: research-pubs@uow.edu.au

Space time spreading with modified Walsh-Hadamard sequences

Abstract
Previous work has shown that the performance of a space time spreading (STS) system using Walsh codes with two transmit antennas at the base station (BS) is degraded in the presence of mutual interference from adjacent sectors in the same cell. We use modified Walsh-Hadamard sequences exhibiting improved cross-correlation performance, which potentially mitigates the effects of MAI (multiple access interference). The presented study also looks at variation of sets of different modified Walsh-Hadamard codes being used by the adjacent interferer, with a hundred randomly selected pairings being chosen, as well as the case where one set of alternate codes is used. It is shown using simulation that significant improvement of the order of 0.5-2 dB is possible using these sequences instead of the standard Walsh code previously proposed.

Keywords
Hadamard codes, adjacent channel interference, binary sequences, cellular radio, correlation theory, interference suppression, space-time codes, spread spectrum communication, transmitting antennas

Disciplines
Physical Sciences and Mathematics

Publication Details
This paper originally appeared as: Vial, P, Wysocki, BJ, Raad, I & Wysocki, TA, Space time spreading with modified Walsh-Hadamard sequences, IEEE Eighth International Symposium onSpread Spectrum Techniques and Applications, 30 August-2 September 2004, 943-946. Copyright IEEE 2004.

This conference paper is available at Research Online: http://ro.uow.edu.au/infopapers/94

Space Time Spreading with Modified Walsh-Hadamard Sequences

P Vial, B J Wysocki, I Raad, T Wysocki,
Email: {Peter_Vial;bjw;ibrahim;wysocki}@uow.edu.au
University of Wollongong
School of Electrical Computer and Telecommunications Engineering

Abstract: Previous work has shown that the performance of a Space Time Spreading (STS) system using walsh codes with two transmit antennas at the Base Station (BS) is degraded in the presence of mutual interference from adjacent sectors in the same cell. In this paper we use Modified Walsh-Hadamard sequences exhibiting improved cross-correlation performance, which potentially mitigates the effects of MAI (Multiple Access Interference). The presented study also looks at variation of sets of different Modified Walsh-Hadamard codes being used by the adjacent interferer, with a hundred randomly selected pairings being chosen, as well as the case where one set of alternate codes is used. It is shown using simulation that significant improvement of the order of 0.5-2 dB is possible using these sequences instead of the standard Walsh code previously proposed.

Key words: Space Time Spreading, Walsh Codes, Spreading Sequences, Modified Walsh-Hadamard Codes, Multiple Access Interference (MAI)

1 Introduction

Previous work has shown that the performance of a Space Time Spreading (STS) [2] system with two transmit antennas at the Base Station (BS) is degraded in the presence of mutual interference from adjacent sectors in the same cell. The study in [2] was conducted using a set of four orthogonal Walsh codes with the varying alignment of code boundaries. It was shown that significant degradation occurred compared to the case where no adjacent sectors existed. Other studies have indicated that better sets of orthogonal codes can be found which mitigate the effects of Multiple Access Interference (MAI) [3]. These codes are here applied to a Space Time Spreading System as proposed in [1] and used in [2].

1.1 Space Time Spreading Systems

In [1] an open loop transmit diversity scheme is proposed referred to as Space Time Spreading. The system proposed in [1] considered both real and complex symbol constellations, which this study investigates only the case of a real symbol constellation when Binary Phase Shift Keying (BPSK) is used. Figure 1 shows the block diagram of the considered system.

The STS scheme [1] performs a serial to parallel conversion separating the incoming binary data stream into odd and even symbols, identified as b_1 and b_2. These are then radiated by two antennas as follows:

$$\begin{aligned} t_1 &= \left(1/\sqrt{2}\right)\left(b_1\underline{c}_1 + b_2\underline{c}_2\right) \\ t_2 &= \left(1/\sqrt{2}\right)\left(b_2\underline{c}_1 - b_1\underline{c}_2\right) \end{aligned} \qquad (1)$$

where $\underline{c}_1$ and $\underline{c}_2$ are the orthogonal spreading codes used. In the previous study [2] the length of the orthogonal codes was N=128. While the improved codes used in this study had a chip length of N=32. In Equation 1 the multiplier $1/\sqrt{2}$ is used to normalize the power for fair comparison to that of a single antenna system. The transmitted signal from each antenna is then radiated towards the receiver using different paths (the two transmit antennas need to be about ten wavelengths apart to be uncorrelated [4][5]). In the model here (and in [2]) there is no multipath, only the single path between each individual transmitter and the receiver. Each of these paths will experience a different complex flat fading coefficient or gain during each symbol period. In the model they are faded using a Rayleigh probability density with unity mean and a uniform phase distributed over the interval zero to 2π inclusive. At the receiver the signal is de-spread. In [1], the following notation is used:

$$\underline{d} = \begin{bmatrix} d_1 \\ d_2 \end{bmatrix} = \begin{bmatrix} d_1 & d_2 \end{bmatrix}^{\mathrm{T}} \qquad (2)$$

and

$$H = \begin{bmatrix} h_1 & h_2 \\ -h_2 & h_1 \end{bmatrix} \quad \underline{b} = \begin{bmatrix} b_1 \\ b_2 \end{bmatrix} \quad \underline{v} = \begin{bmatrix} \underline{c}_1^H \underline{n} \\ \underline{c}_2^H \underline{n} \end{bmatrix} \qquad (3)$$

where $(\bullet)^H$ stands for the Hermitian transpose and $\underline{n}$ is a N by 1 vector of additive zero mean complex Gaussian noise samples. Using this notation the received signal vector $\underline{d}$ can be expressed as:

$$\underline{d} = \frac{1}{\sqrt{2}} H \underline{b} + \underline{v} \qquad (4)$$

In [1] they show that if h_q signifies the q^h column of H (q being an index that can take on the values of only 1 or 2 here) then the following is true:

$$\Re e\left\{\underline{h}_q^H \underline{d}\right\} = \left(1/\sqrt{2}\right)\left(|h_1|^2 + |h_2|^2\right) b_q + \Re e\left\{\underline{h}_q^H \underline{v}\right\} \qquad (5)$$

Then Equation 5 is the form used to allow the decoding of the symbols transmitted, followed by parallel to serial conversion to the received bit stream.

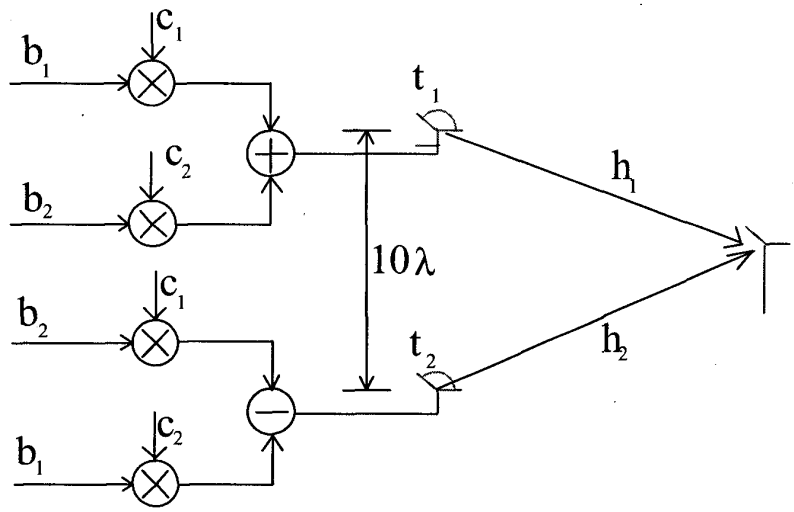

Figure 1: The block diagram of a STS system with two transmit and one receive antenna considered in this paper [2]

2. Improved Orthogonal Codes

In [3], it was shown that better choices in the orthogonal codes can result in improved cross-correlation performance which potentially mitigates the effects of MAI. It has been shown that different H-equivalent Hadamard matrices can be used to obtain different sets of spreading sequences having different correlation properties. The H-equivalent Hadamard matrices are obtained by multiplying whole column(s) by +/-1 or by using different permutations of the columns. The sequences used here are derived from the Sylvester-Hadamard matrix of order 32 (Sylvester-Hadamard construction leads to the Walsh-Hadamard sequences) and then by multiplying it by a diagonal matrix with a diagonal equal to [3]:

Diag Matrix =

[+--+-+--+---++++--+++++++++++++]

Where ' + ' and ' – ' denote '+1' and '-1' respectively. These modified sequences are characterised with a peak value in the magnitude of aperiodic cross-correlation function between any pair of two sequences C_{max} equal to 0.4063, compared to C_{max}=0.9688 for the original Walsh-Hadamard sequences. That peak value is very important in considering the MAI for the case where the chosen sequences do not change for the duration of the whole frame (at least) and when the number of active users is low [3].

3. Modeled Scenario for MAI

In the situation where 120 degree sectorisation is used, with a target mobile user (called user 1) and another mobile user (called user 2) in an adjacent cell, scattering may occur which will cause interference signal to impact the receiver at user 1 from the transmitter (in the adjacent sector) of User 2. Such a situation is shown in Figure 2. The work in [2] has shown that under these conditions the received signal from User 2 will vary and this signal will tend to be unsynchronised resulting in Multiple Access Interference (MAI) at User 1's receiver due to User 2's transmission (the codes used were orthogonal, but as the received signal at User 1 from User 2 was unsynchronised then interference and degradation in the Bit Error Rate was experienced).

In [2] we outline a scenario where it is possible that an adjacent sectors signal can be stronger to very much weaker at the receiver of a different mobile. This scenario is also assumed for this study and is illustrated in Figure 2. It assumes that the transmitter and target receiver are about 300 metres apart, that scatterers exist in the adjacent sector and that the other sectors multipath signal is less than 900 metres in distance. It also assumes that the transmitters in adjacent sectors are uncorrelated [2]. The interference from an adjacent sectors signal will be very likely misaligned at the receiving antenna. Thus the codes for the different would be no longer orthogonal due to this misalignment. This was simulated in [2] by varying the chip boundary between the two signals from 0 to 127 uniformly. In [2] this variation over 300 metres corresponded to a variation of 2.344 metres whereas using the 32 chip code it corresponds to a variation of 9.375 metres. The expected SNR at the receiver from the interferer's transmitter (the adjacent sector) was varied over the range -5dB to 5 dB and that from the expected transmitter was left constant at 0 dB. As in [2], flat fading complex coefficients were changed every 2346 symbols actually transmitted. Also as in [2], chip delay was varied every 18768 simulated symbols.

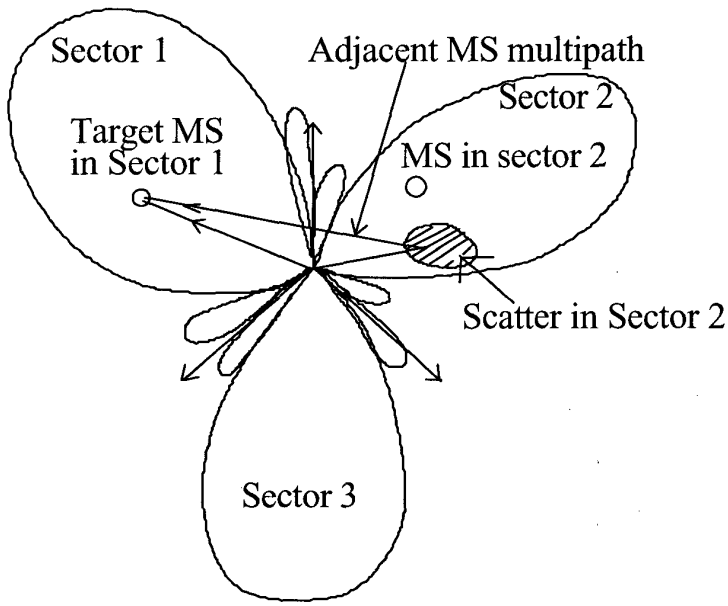

Figure 2: System with scatter in Sector 2 producing MAI in Sector 1[2]

4. Results and Observations

The simulation was run using the 32 chip Modified Walsh-Hadamard code set [3], with two codes kept constant for the target user (User 1) and then a random sequence of code pairs was generated. This sequence was kept the same for all simulations, with the seed value of noise sources and bit stream sources changed. In another experiment, to compare directly to the case in [2] where only 4 orthogonal 128 chip Walsh codes were used, only four of the improved codes were used for the entire simulation. Seed values used were the same between the different simulation runs (a set of 3 seed value sets were used for the results in [2] and a set of 4 were used for this study, 3 of which were the same as in the values used in [2]).

Three curves are shown in Figure 3. The curve with the worst BER performance is from the results obtained in [2] with the Walsh codes. The curve with the best BER performance are obtained in this study, using only four improved orthogonal codes which were kept constant fro the entire simulation. This is the same situation, which was simulated in [2] with Walsh codes. The curve, which lies between the worst and best performance, was the BER performance for the more practical situation where the pairs of codes used in the adjacent sector are different over time. This corresponded in the simulation to 100 different pairs of these codes during the period of the simulation. As different coding pairs will interact in a similar but slightly different manner in terms of their statistical effect of the cross correlation, auto- correlation, and aperiodic cross-correlation (see Figure 1 in [3]) this worse performance is expected. An improvement of between 0.5 – 2 dB is seen in comparison between the original study in [2] and the results obtained using the proposed Modified Walsh-Hadamard codes of this study. It should be noted that when the signal from User 2 has low power there is very little difference between the use of the codes, but as the signal strength of User 2's interference increases at User 1's receiver, the improved codes show a clear improvement in performance in terms of BER.

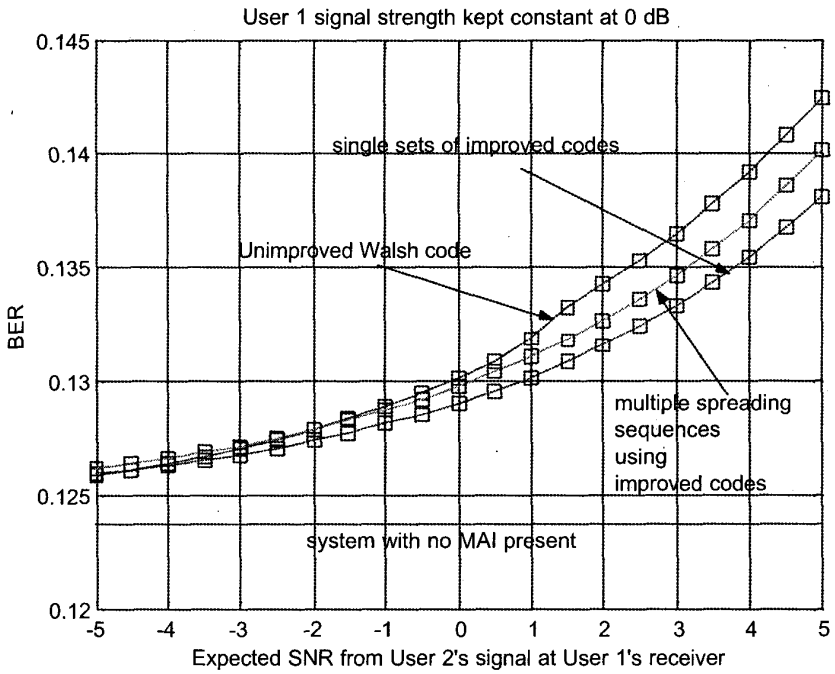

Figure 3: Bit Error Rate versus Expected SNR from User 2's signal at User 1's receiver comparing the results from original study [2] and those obtained using the improved Modified Walsh Hadamard codes proposed in [3].

5. Conclusion

This study compared the use of orthogonal Walsh codes in a STS system with two transmit antennas with the use of the improved Modified Walsh Hadamard codes described in [3]. It was found that when the MAI is significant the improved codes improve the BER performance by 0.5-2dB over the unimproved code. Moreover, that improvement has been achieved despite using four times shorter spreading codes resulting in a smaller processing gain. Future work may include looking at the effect of varying the effects of MAI over smaller chip offset intervals to see if there is any performance effects when chip offsets are smaller than suggested in this study.

References

1. Bertrand Hochwald, Thomas L Marzetta, Constantinos B Papadias, "A Transmitter Diversity Scheme for Wideband CDMA Systems Based on Space-Time Spreading", IEEE Journal on selected areas in communications, Vol 19, No 1, January 2001, pp. 48-60
2. Peter James Vial, Ibrahim Raad, Tad Wysocki, "On the effect of adjacent sector Multiple Access Interference on Space Time Spreading Systems", The 7th International Symposium on Digital Signal Processing and Communications Systems (DSPCS'03), Coolangatta, Queensland Australia, 8-11 December 2003, pp. 543-548
3. B J Wysocki, T A Wysocki, "Modified Walsh-Hadamard sequences for DS CDMA wireless systems", International Journal of Adaptive Control and Signal Processing, 2002, 16:589-602
4. J Fuhl, A F Molisch, E Bonek, "Unified channel model for mobile radio systems with smart antennas", IEE Proceedings – Radar, Sonar Navigation, Vol 145, No1 Feb 1998 pp. 32-41
5. Pieter van Rooyen, Michiel Lotter, Danie van Wyk, "Space Time Processing for CDMA Mobile Communications", Kluwer Academic Publications, 2nd printing 2001