UNIVERSITY
OF WOLLONGONG
AUSTRALIA

University of Wollongong
Research Online

Department of Computing Science Working Paper Series

Faculty of Engineering and Information Sciences

1982

Computer controlled galvanizing

P. J. McKerrow
University of Wollongong, phillip@uow.edu.au

Recommended Citation
McKerrow, P. J., Computer controlled galvanizing, Department of Computing Science, University of Wollongong, Working Paper 82-10, 1982, 21p.
http://ro.uow.edu.au/compsciwp/27

Research Online is the open access institutional repository for the University of Wollongong. For further information contact the UOW Library: research-pubs@uow.edu.au

Computer Controlled Galvanizing

Phillip John McKerrow

Department of Computing Science,
The University of Wollongong,
Post Office Box 1144,
Wollongong, N.S.W. 2500
Australia

ABSTRACT

In the galvanizing process excess zinc is coated onto the steel strip to ensure that the finished product exceeds coating quality standards. Reducing the excess coating to a minimum while maintaining product quality can significantly reduce a company's zinc bill.

A computer based coating-mass control system has reduced zinc consumption by thirteen percent on a galvanizing line saving in excess of one million dollars annually. The same system has been installed on a zincalume line with similar results.

The most significant time constant in the process is the transport delay between coating-mass control and measurement. Feedforward control, using a simple model and a table of adapted constants, compensates for this during major changes in process conditions. Feedback control, using a self-adapting linear incremental model, maintains the coating-mass within range during steady-state conditions.

Keywords: galvanizing, zincalume, computer, mathematical model, self-adaptive control system, feedforward control, feedback control, linear incremental model, zinc, air-jet stripping, X-ray fluorescence, transport lag, zero errors, real-time, multi-tasking, operating system.

Acknowledgements

The author wishes to thank the management of John Lysaght (Australia) Limited for permission to publish previously restricted information.

1. Introduction

During the last decade the price of zinc has risen rapidly. A high-speed galvanizing line uses an average of forty tons of zinc a day, costing at least nine million dollars annually. Prior to the development of zinc coating-mass measurement gauges, coating-mass was measured in an off-line laboratory with a half-hour feedback time. Typically 15% excess zinc was coated onto the steel strip to ensure that the finished product met quality standards. To reduce overcoating the company decided to install an X-ray fluorescence measuring gauge, mechanise the coating control equipment and develop a computerised control system. This project resulted in a 13% reduction in zinc usage saving in excess of one million dollars annually. The system has also been applied to a high-speed zincalume line with similar results.

2. The Galvanizing Process

Steel strip entering a galvanizing line is brittle as a consequence of previous thickness reduction in a cold-rolling mill. Internal stresses are removed by annealing the steel strip in an inert atmosphere furnace (figure 1). The steel is then cooled to a temperature slightly above the molten zinc temperature (450 degrees C) before it enters the zinc bath.

In the zinc bath the strip passes around the sink roll, travels past the deflector roll and then rises vertically out of the bath through the stripping knives, which remove the excess zinc. The remaining zinc on the strip surface freezes before it reaches the turn around roll. Heat is transferred from the steel strip to the zinc helping to maintain the bath at the correct temperature. As the steel moves through the bath the zinc in contact with it is dragged along, and pulled out to form the protective coating.

Some of the zinc is returned to the bath by gravitational force. However, in order to achieve the correct coating mass and maintain it over a range of process conditions, additional stripping action is required. A pair of air knives, which direct a long thin wedge shaped jet of high velocity air at the strip, perpendicular to the direction of strip travel, are used to control the coating mass by forcing excess zinc to flow back into the bath.

Several grades of product are produced, with coating mass

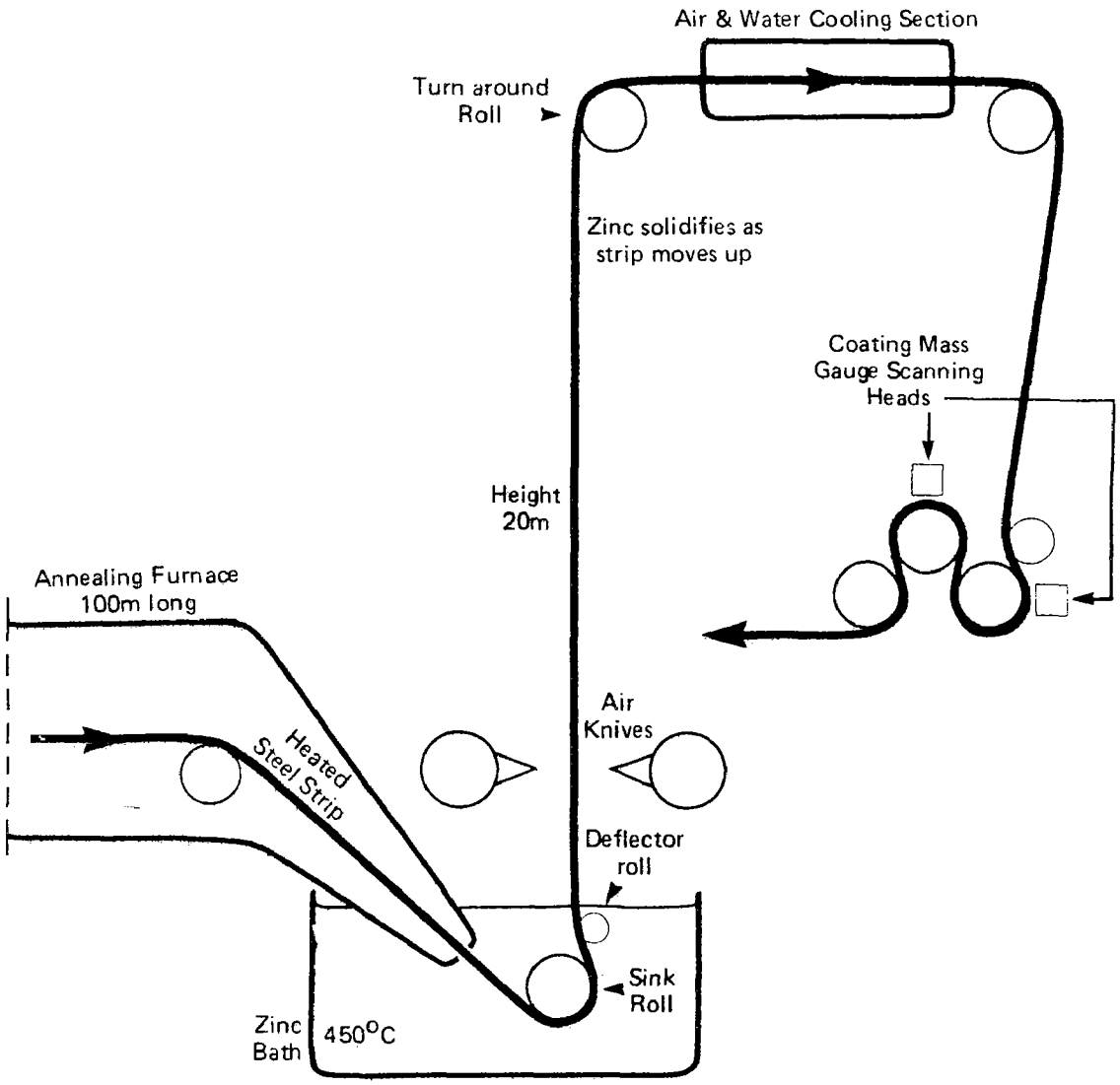

FIGURE 1 COATING SECTION OF A CONTINUOUS GALVANIZING LINE

ranging from 100 grams/square metre to 550 grams/square meter. International standards [1] specify that the average mass, across the strip (both surfaces), must be above the target value, and the mass at any point on a surface must be greater than 40% of the target.

In addition to the above, the control system was designed to maintain differential and skew mass to be less than five grams per square metre. Differential mass is the difference between the coating mass on the top surface of the strip and the coating mass on the bottom surface. Skew mass is the difference between the coating mass on the two halves, split longitudinally on the same surface, of the strip.

3. The Control Problem

There are several physical factors, in both the process and the measuring gauge, which make control difficult.

To protect the gauge measuring heads from excessive radiant energy, the strip has to cool considerably before the mass can be measured. The gauge is placed, sixty metres down stream from the zinc bath, on the nearest convenient bridle after the cooling system. As the line speed varies from 60-180 metres per minute this introduces a speed dependent transport-lag in the feedback loop of 60-20 seconds.

Instantaneous mass readings are not available [2] because the gauge has to average the X-ray count over a four second period to smooth out the variations in energy emission inherent in X-ray fluorescence. This is done as the gauge heads scan across the surfaces of the strip. At the end of each scan an average coating mass is calculated by averaging the four second samples. This introduces a further variable time, (24 to 48 seconds depending upon strip width) which is added to the transport-lag. The transport-lag dominates the control system and the dynamic response of coating mass to air-knife rig changes is insignificant in comparison. As a result, feedback control is basically steady state control. To overcome the effects of the transport delay, feedforward control, based on a process model, is needed every time there is a significant process change. This alone is sufficient to justify using a computer system instead of a traditional analog control system.

Physically the galvanizing process is very complex [3] with many independent variables affecting the final coating mass. Some variables (line speed, jet pressure, jet-to-strip distance and strip shape) have considerable effect on the final mass. Other variables (height of jets above the bath surface, bath temperature, bath composition, steel temperature, metal thickness and ambient temperature) have less effect on the coating mass, but make modelling and control more difficult.

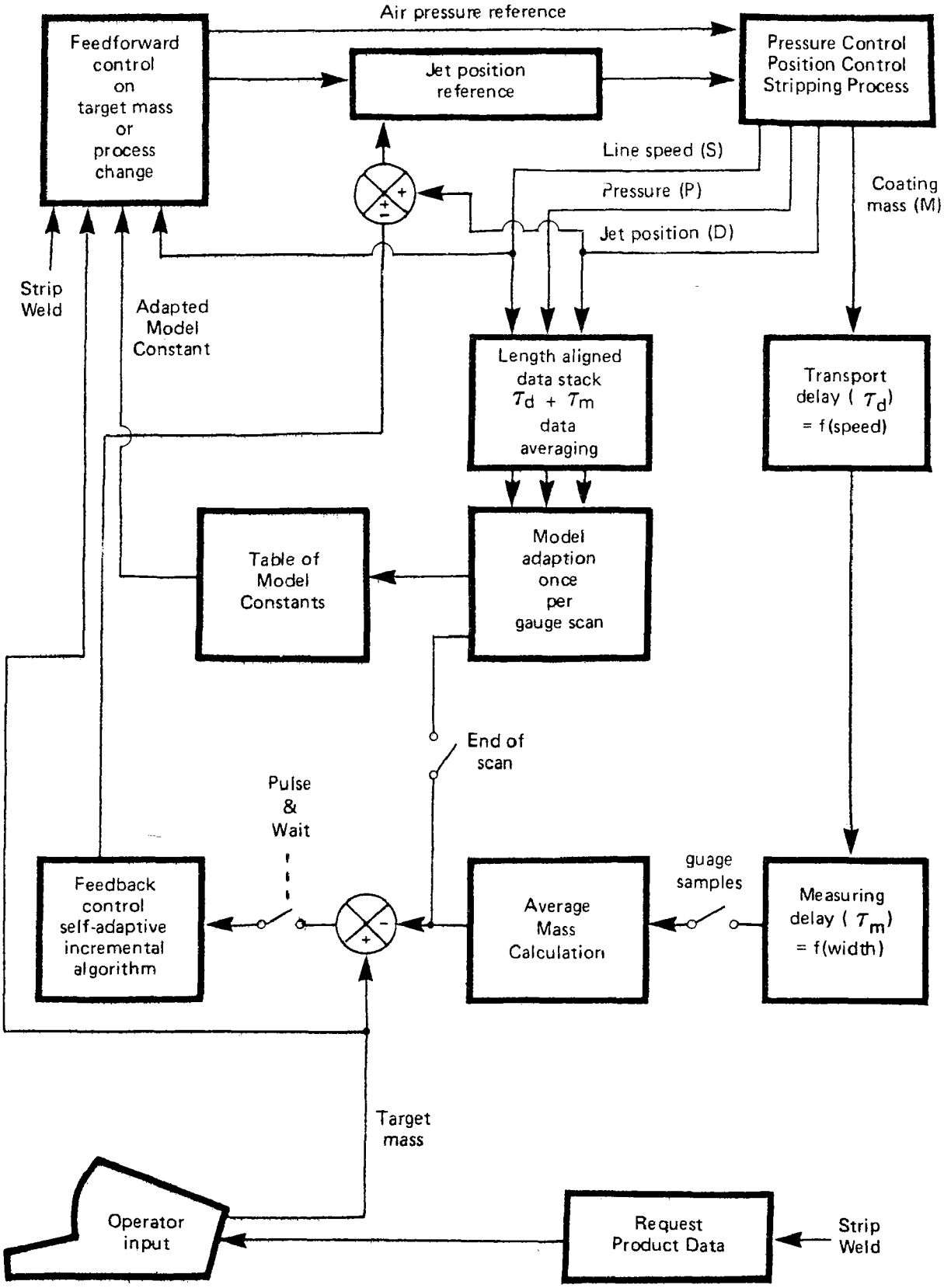

FIGURE 2 BLOCK DIAGRAM OF THE CONTROL SYSTEM

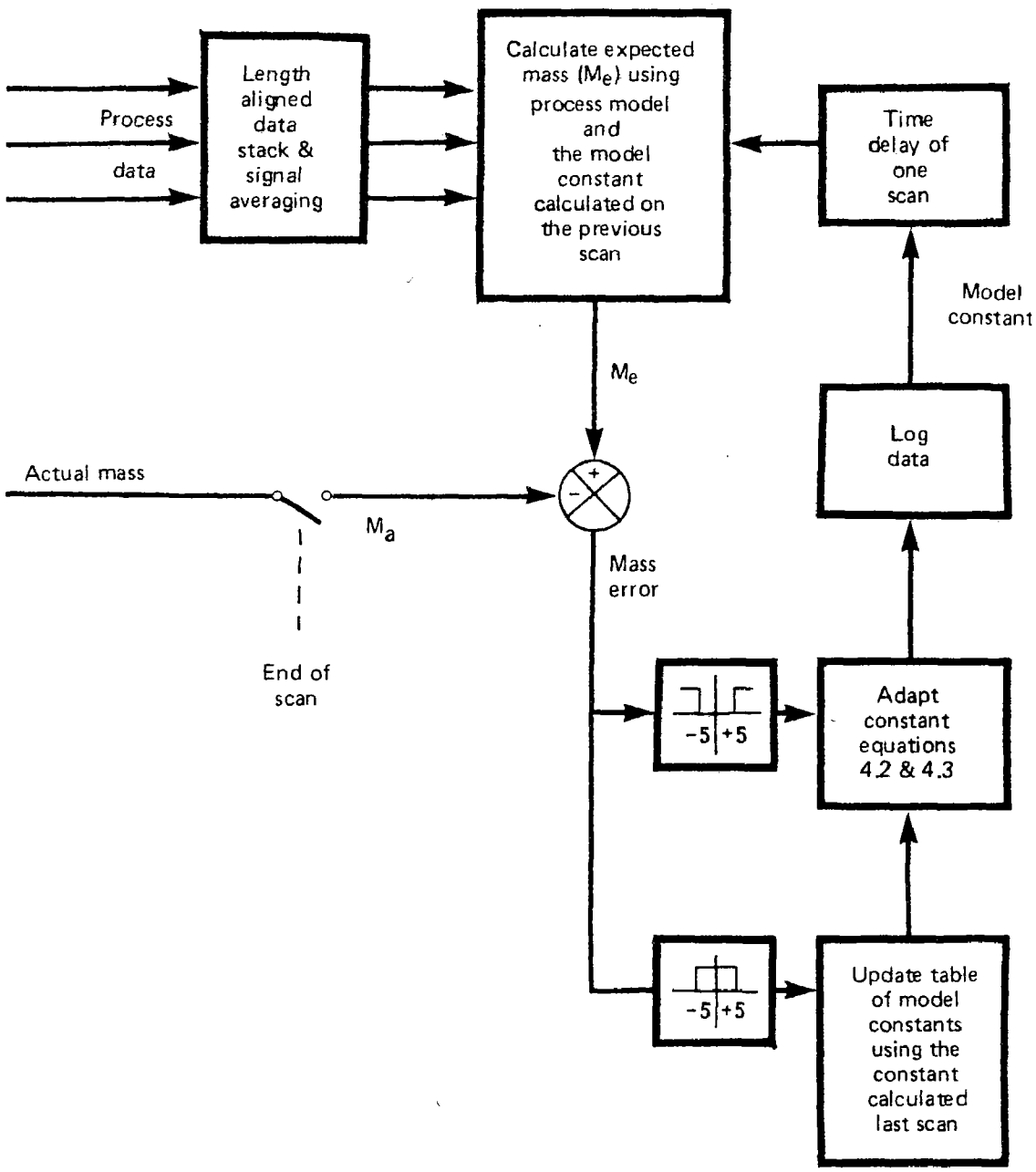

FIGURE 3 BLOCK DIAGRAM OF THE PROGRAM USED FOR MODEL ADAPTION AND FOR MODEL VERIFICATION. THIS PROGRAM RUNS AT THE END OF EVERY MASS GAUGE SCAN.

4. Mathematical Model

A mathematical model of the process is essential for feedforward control and aids the implementation of feedback control (figure 2) by providing insight into the process operation. A control system based on a reasonably accurate model can be transferred to other process lines using different coating compositions relatively easily. The system described in this paper has also been installed on two other lines, one a low speed galvanizing line, the second a high speed zincalume (mixture of zinc and aluminium) line. Other control systems designed for this application [4,5,6] have either used large look up tables with a partial derivative model or self-learning models requiring considerable work to transfer the control system to another process line.

The process model (equation 4.1) is a static model because transport delay is the dominant factor. Process changes that require feedforward control are irregular (one every 15 minutes to one every 15 hours). The model was developed by empirical methods [7], checked against laminar and turbulent flow theory [8], and verified using on-line computer data-logging and model adaption [9].

$$M = \frac{C\ D\ S^{0.75}}{P^{0.6}} \qquad 4.1$$

where

M is coating-mass is grams per square metre
C is the model constant 1.1
D is the jet-to-jet distance in millimetres
S is the line speed in metres per minute
P is the jet air-pressure in kilopascals.

Sets of data, collected on-line under different process conditions, were substituted into the basic form of the model to derive exponents and constants using regression analysis. These were averaged to produce a model (equation 4.1) for on-line verification. An analysis program (figure 3) continuously adapted and logged the model constant. Data measured at the air-knives (jet-to-jet distance, pressure and speed) was aligned with the mass data using a length-aligned data stack (figure 2). To smooth out noise, this data is averaged over a complete gauge scan as is the mass data. At the end of each gauge scan this data is used to adapt (equations 4.2 & 4.3) the model constant for the current process conditions.

mass g/m2 \ speed m/min	60–80	80–100	100–120	120–140	140–160	160–180
120	1.202	1.042	0.982	–	–	–
200	1.062	1.032	1.049	1.049	1.012	–
300	1.027	1.036	1.086	1.074	1.075	–
430	1.150	1.176	1.167	1.076	1.029	0.968
550	1.202	1.073	1.07	–	–	–

TABLE 1 TYPICAL SET OF ADAPTED PROCESS MODEL CONSTANTS.

$$\text{Calculated Constant } C_c = \frac{M\ P^{0.6}}{D\ S^{0.75}} \qquad 4.2$$

$$\text{New Constant } C_i = \text{Old Constant } C_o + \frac{C_c - C_o}{4} \qquad 4.3$$

This analysis proved the model to be accurate and repeatable for a particular set of process conditions, but the adapted constant varies by 10% over the complete range of process conditions. This variation is partly caused by non-linearities in the sensitivity of coating-mass to speed changes as the line speed increases [10]. A table of adapted constants (table 1) is used to compensate for this variation [9]. The control system selects the constant for the desired speed and mass range.

This table remains consistent during the time an air-knife rig is in service (typically two months). When a new rig is installed the jet-position transducers have to be re-zeroed; a difficult task in a harsh environment. As a result there are always zero errors in the jet-to-jet distance measurement. Model adaption overcomes this problem by generating a new table of constants but the first time, after a rig change, that a set of process conditions occurs the appropriate constant may be incorrect causing small errors in the feedforward control.

Continuous on-line adaption also compensates for the fact that the model only includes the more significant process variables.

5. Feedforward Control

The process model is insufficient for feedforward control because it includes two independent variables (jet-to-jet distance and air pressure) both of which can be used to control coating-mass. Line speed is set to give the correct annealing cycle in the furnace and thus feedforward control is required on both coating-mass target changes and line speed changes. In order to calculate a unique air-knife set-up a second equation relating the independent variables to one-another or to one of the fixed parameters is needed.

$$P \times (D-15) = 1000 \qquad 5.1$$

An equation relating the independent variables to one-another was chosen [9] because:

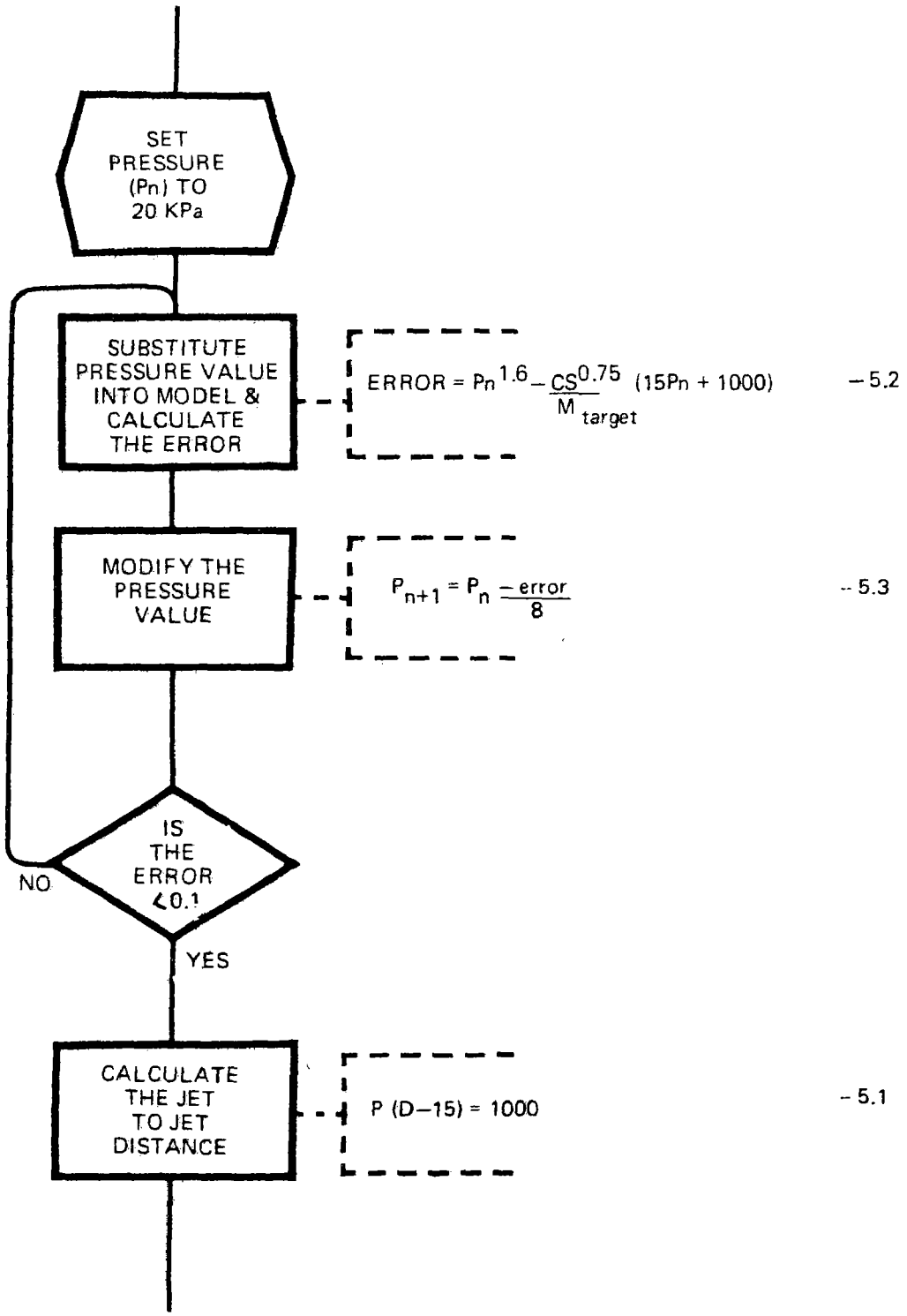

FIGURE 4 BLOCK DIAGRAM OF INTERATIVE LOOP USED DURING MODEL PREDICTION OF THE CONTROL SET POINTS

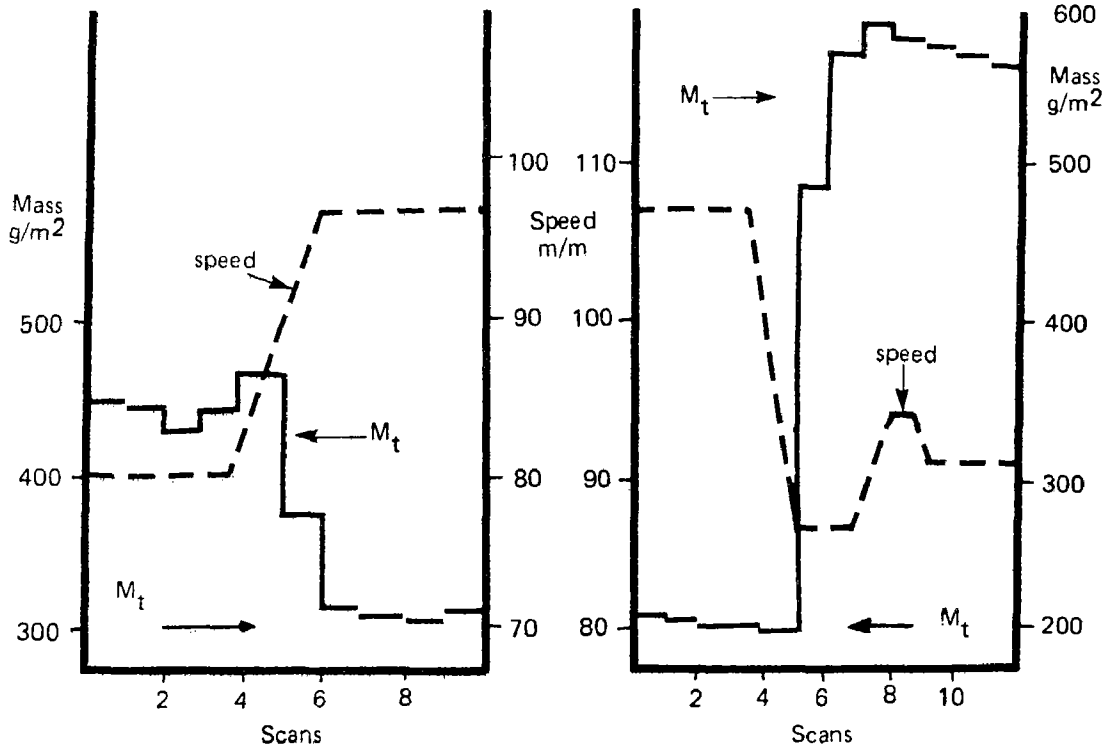

FIGURE 5 RESPONSE OF SYSTEM TO SIMULTANEOUS TARGET MASS AND SPEED CHANGES. THE TARGET CHANGES HAVE OCCURRED IN THE MIDDLE OF A GAUGE SCAN AND THUS THE INTERMEDIATE MASS READING IS AN AVERAGE OF THE MASS BEFORE, DURING AND AFTER THE CHANGE.

(i) Control set-points calculated with it in conjunction with the model fit within system constraints.

(ii) The operation is easy to visualise because operating conditions lie along a known curve.

(iii) Feedforward control changes both independent variables resulting in smaller individual changes than if only one was changed.

(iv) The operating conditions can be modified easily by changing the constants in the equation. Zincalume has a completely different set of system constraints requiring different operating conditions and hence different constants in the equation.

To calculate the new control set-points the pressure/distance relationship (equation 5.1) is substituted for distance in the process model forming a polynomial in pressure (figure 4) which is solved iteratively, typically converging to the correct pressure value in three to four iterations.

Feedforward control (figure 2) calculates new air-knife position and pressure set points to respond to target mass changes, manual pressure changes greater than 2 kilopascals and line speed changes greater than 4 metres per minute. For some products, and to correct for some shape problems, it is desirable to set the jet air-pressure to a fixed value and let feedforward control adjust distance only. In all cases the program uses a mass reference twenty grams above the mass target to ensure that no undercoating occurs. The excess is reduced by feedback control.

Feedforward control responds more quickly to process changes than either feedback control or manual control can (figure 5).

6. Feedback Control

Most of the mass control, and hence most of the economic return, is achieved by the feedback control system (figure 6). A pulse-and-wait control algorithm controls coating-mass by controlling jet-to-jet distance. A digital computer simulation [11] of a typical process with significant transport delay showed that the difference in response between a pulse-and-wait controller and a more sophisticated sampled data controller is small. A linear incremental model (equation 6.2) is used to relate jet-to-jet distance to coating mass. This model is derived by taking partial derivatives with respect to distance of the process model.

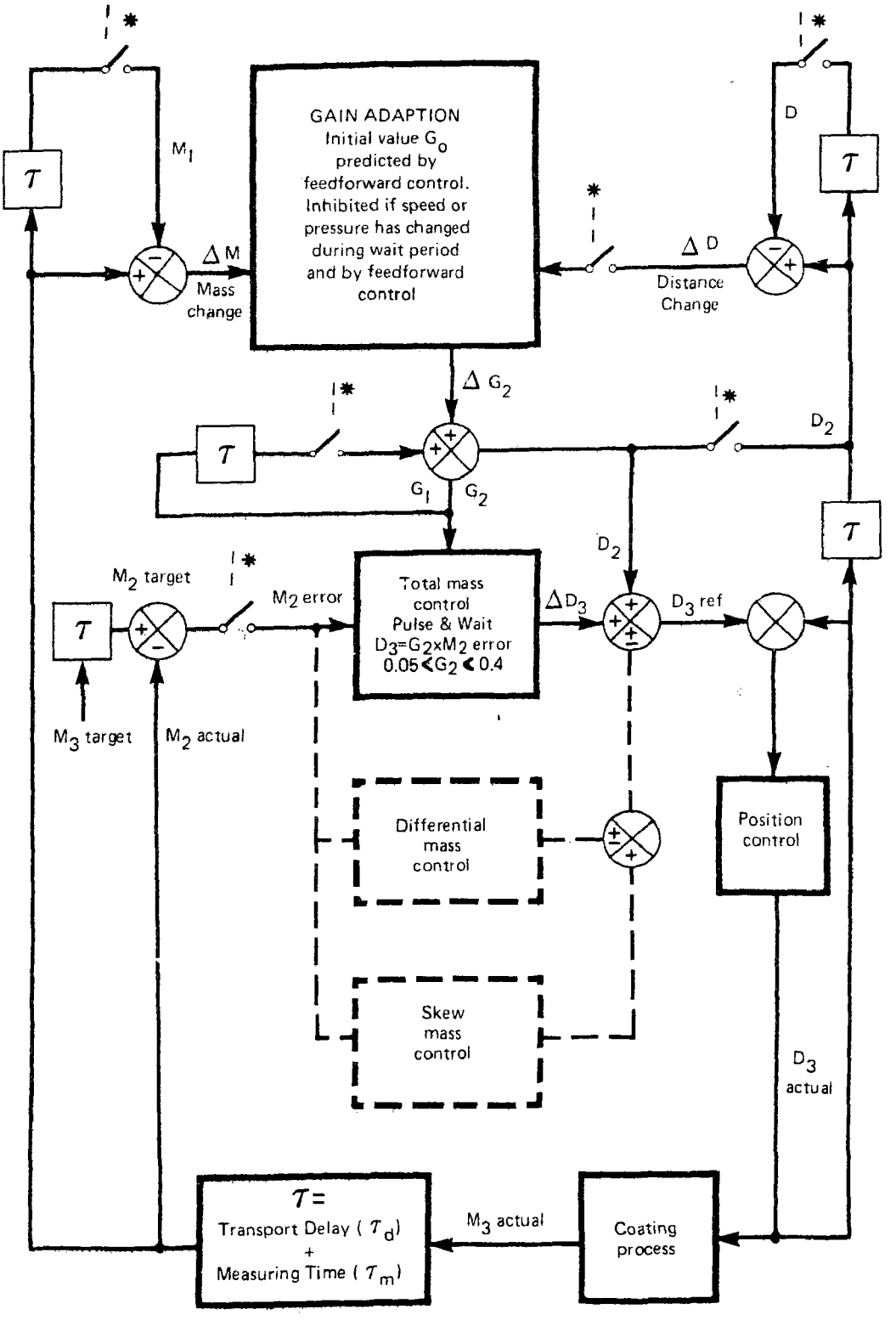

* Samples taken at the end of each wait period, pulse-and-wait control.

FIGURE 6 BLOCK DIAGRAM OF THE FEEDBACK CONTROL SYSTEM – PERIODS AFTER SUCCESSIVE TRANSPORT DELAYS ARE REPRESENTED BY THE SUBSCRIPTS 1, 2 & 3.

$$\frac{\delta M}{\delta D} = \frac{M}{D} = \frac{\Delta M \text{ actual}}{\Delta D \text{ actual}} = \text{process gain} = \frac{1}{\text{optimum loop gain}} \qquad 6.1$$

$$\text{Required Distance Change } \Delta D = \text{Loop Gain } G * \text{Mass Error } \Delta M \qquad 6.2$$

The wait period for the pulse-and-wait controller is calculated (equation 6.3) as an integral number of gauge scans so that the measurements made during the last scan of the period are aligned with the results of the last pulse.

$$\text{Transport Delay (gauge scans)} = \frac{\text{Transport Distance}}{\text{Scan Distance}} + 2$$

$$= \frac{\text{Transport Distance(m)} * 60 * \text{Scan Speed(mm/sec)}}{\text{Line Speed(mpm)} * \text{strip width(mm)}} \qquad 6.3$$

Jet air-pressure is not modified by feedback control because differential and skew mass can only be changed by changing jet-to-strip distance. Also taking partial derivatives of the process model with respect to pressure gives a non-linear relationship, hence the sensitivity of coating-mass to pressure change varies over the control range, making control more difficult [9].

Feedback loop-gain is predicted by the feedforward control for the new set of process conditions (equation 6.1) and then adapted at the end of each wait period by the feedback control. Under typical process conditions a one millimetre change in jet-to-jet distance a gives five to ten grams per square meter change in coating mass.

Standard adaptive control algorithms [12] are designed for dynamic systems using absolute models, not for systems where the dominant time constant is transport lag and where absolute measurements may be inaccurate. In this system the control and gain adaption algorithms use a static incremental model which, is adequate for pulse-and-wait control and, eliminates the effect of

zero errors in the absolute jet-position measurement. The feedback control system will work without an accurate process model (due to the linear relationship of mass change to distance change), and it does not rely on the gain adaption to close the loop. Feedback control was in operation for nine months before feedforward control was implemented.

Gain adaption (equation 6.4) is requested to occur at the end of any wait period following a pulse which causes a jet-position change greater than 0.2 millimetres.

$$\text{New Gain } G_n = \text{Old Gain } G + \frac{G - \Delta D/\Delta M}{40/\Delta D} \qquad 6.4$$

The damping of the adaption calculation ($40/\Delta D$) is dependent upon the magnitude of the position change in order to reduce the effect of noise on small changes and to allow fast response to large changes. Adaption is inhibited during the transport period after feedforward control.

Incremental position changes required to correct for total, differential and skew mass errors are calculated and added to the actual jet-positions to give the new absolute jet-position references. Thus the system relies on the inherent accuracy of the relative jet-position measurements and is not affected by zero errors in the absolute jet-position measurement.

To ensure product quality (no undercoating) the feedback control mass-reference is set slightly above the desired mass-target. With perfectly flat strip it is possible to control coating mass to be in the range mass-target to mass-target plus one percent. However ideal conditions do not always occur and the mass control system has a control deadband which increases as the gain of the feedback control loop decreases. The deadband is due to the 0.2mm deadband in the sampled-data jet-position control loops. Thus the feedback control mass-reference must be above the mass-target to eliminate undercoating due to noise and to ensure that the uncontrolled region is above the mass-target.

7. Computer System

Model development and verification, software development, and control system development were all done on the target computer system (a Perkin-Elmer 7/16 running RTOS). The operating system is a flexible real-time multi-tasking system with minimal software tools. All applications software [13] was written in a combination of Fortran and assembler; the only languages available. High priority direct-digital-control programs and programs responding to interrupts were written in assembler. Data

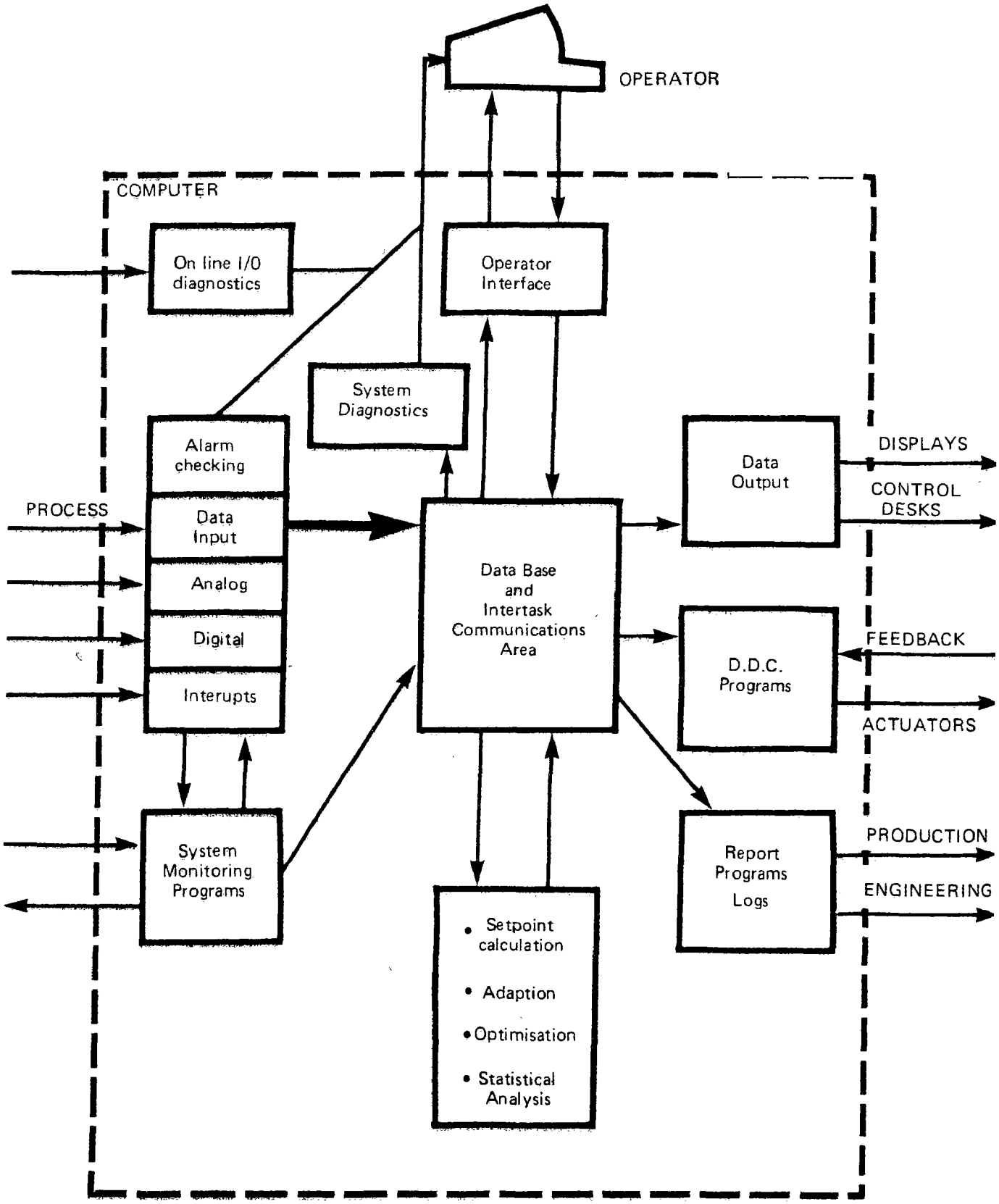

FIGURE 7 BLOCK DIAGRAM OF THE PROCESS CONTROL SOFTWARE– SHOWING DATA FLOW.

collection, data logging, model adaption and lower priority control programs were written in Fortran. Interprogram communication is carried out using a common data base stored in a fixed area of memory (an extension of Fortran common).

Eight memory resident control and logging programs together with the operating system and interprogram communication area occupy sixty of the available sixty-four kilobytes of memory. Auxiliary programs are swapped in and out of the remaining memory. A daily production report is generated and an engineering data log can be produced on request. On-line debugging programs were written because the manufacturer supplied diagnostics can not be run under the operating system. Thus the system had to be taken down to do any fault finding; not very desirable in a continuous real-time operation. Also diagnostics that could be run and understood by process line maintenance electricians were required.

The control system has been split into programs according to function and timing (figure 7).

a. Data Input programs read the process signals, convert them to physical units, check limits and generate alarms. Data for model adaption, mass control and the generation of production and engineering logs is stored in the intertask communication area and on disc files. One program reads, filters and stores the analog inputs (rig positions, speed and pressure) in the lenght-alinged data stack. It is cyclic in operation, with its period related to line speed so that three meters of strip pass through the air-jets between readings. This program starts the feedforward control program and the engineering data logging program when ever a significant process change occurs.

   A second program reads the coating-mass data in response to interrupts at the end of each sample period and each gauge scan. Average mass is calculated and product quality checked at the end of each scan. When a coil is sheared off at the exit end of the line all the data relating to that coil is stored in a disc record for subsequent generation of the production log.

b. Control Output programs control the rig position and air pressure to the desired set-points. Position control uses a sampled-data control algorithm with backlash compensation. One routine is used to implement all four position control loops, executing every fifteen milliseconds until all knife-positions are within their deadbands. The jets are moved by air motors through worm drives. A proportional-plus-derivative algorithm is used for large position errors and a pulse-and-wait algorithm for small position errors. The dual system is used to overcome time lag in the air lines (0.5 seconds) and to compensate for the changing frictional load. Pressure control is by remote preset of

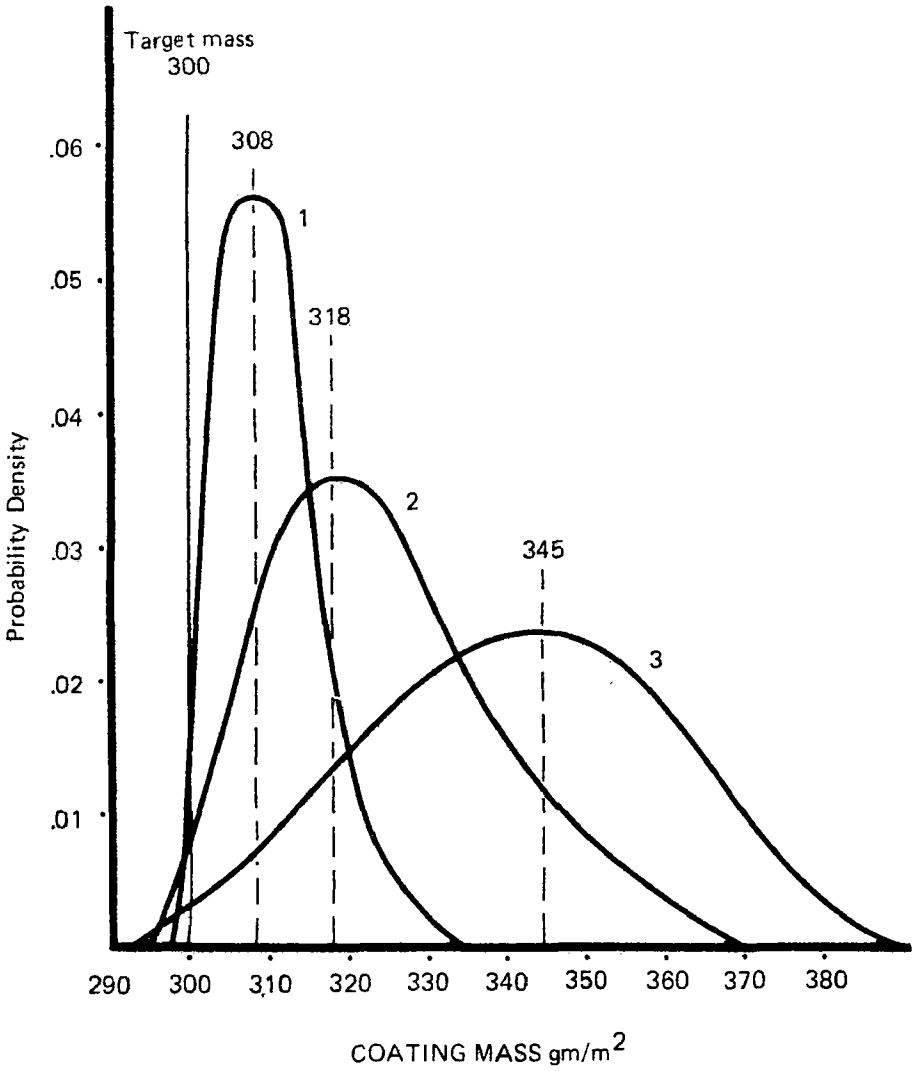

FIGURE 8 COATING MASS DISTRIBUTION FOR 300 GRAM/METRE CLASS PRODUCT PRODUCED AT DIFFERENT STAGES OF THE PROJECT.

CURVE 1 COATING MASS DISTRIBUTION WITH CLOSED LOOP COMPUTER CONTROL.

CURVE 2 COATING MASS DISTRIBUTION WITH MANUAL CONTROL USING MASS GAUGE AND MECHANISED AIR KNIFE RIG.

CURVE 3 COATING MASS DISTRIBUTION PRIOR TO COMMENCEMENT OF PROJECT.

analogue controllers.

c. System Monitoring programs establish that the line is running, the coating mass gauge is scanning and that automatic control has been selected. One program monitors all the controls on the galvanizers desk giving him complete control over the computer system. Another, which tracks the weld through the line, starts the operator product data input program and requests the generation of a coil record for the production report.

d. Control programs calculate new process set-points for feed-forward and feedback control. Also model adaption and mass-reference optimisation are performed by these high level programs. They are synchronised to the proces but have no direct contact with it. All data transfer to and from the data input, control output, system monitoring and human interface programs is done through the interprogram communication area.

e. Human Interface programs allow the operator to enter product data interactively and to monitor system operation. Every time a new coil of steel is welded onto the strip, at the entry end of the line, a program requests product information about the new coil. These programs were designed to be used by semi-skilled workmen who had no previous computer experience.

8. Results

Zinc usage has been reduced by 13% (figure 8) saving in excess of one million dollars per annum. Installation of the measuring gauge and mechanising the control rig reduced the usage by ten percent. Computer control reduced it a further three percent with considerable improvement in product quality.

The system has had complete operator acceptance with no union problems. The operators were consulted at all stages of the project and the working conditions of the galvanizer has improved considerably. Previously he worked in a hot, dirty, noisy environment, but now he spends most of his time in an air-conditioned sound-proof control booth. The system has been installed as a tool for him to use, not to replace him, and the superiority of computer control over manual control was quickly established.

9. Conclusion

This system was made possible by a combination of advances in measurement technology, galvanizing theory and the application of empirical modelling techniques, control theory and computer power. Computers were used in all stages of the project for off line simulation and data analysis, and for on-line model development, software development and process control.

The economic returns were such that the systems has been successfully applied to a second lower speed galvanizing line and to a high speed zincalume line. As this was the first in house computer-based control system undertaken by Lysaghts personnel lack of experience increased the development time.

Using a simple accurate mathematical model reduced the complexity of the final control system, increased understanding of the proces and allowed the system to be shifted to another product easily. Model complexity was reduced by using a small look up table to take into account the effect of less significant process parameters. Self adaptive pulse-and-wait feedback control, including a static incremental model, maintains loop gain near optimum and compensates for non-linearities and parameters not accounted for in the process model.

10. Bibliography

1. Australian Standard No. 1397, 1973.

2. Evans, R. F. Zinc Coating Mass Measurement and Control on a Continuous Galvanizing Line, Atomic Energy in Australia, Volume 20, No. 1, January 1977.

3. Reid, P. The theory of jet stripping - Part 1, Lysaght's internal report, March 1972.

4. Noe, T. G. & Schuerger, T. R. Computer Control of Zinc-Coating Weight on the Fairfield No. 4. Galvanizing Line, 6th Triennial World Congress, International Federation of Automatic Control Massachusetts, 1975, page 46.2.

5. Wilhelm, R. G. Controlling Coating Weight on a Continuous Galvanizing Line, Control Engineering, November 1972.

6. Wehrmann, R.R.W. Philosophy of Coating Mass Control on the No. 4 Galvanizing Line, Iscor Vanderbijlpark Works, ISCOR Internal report, June, 1975.

7 Salon, M. Controlled Line Trial - No. 3 C.G.L. - Reference 98, Lysaght's internal report, October 1973.

8 Harvey, G.F. & Carlton, A. J. Mathematical Model of Air Jet Coating Mass Control, Lysaght's internal report, June 1974.

9 McKerrow, P. J., Control of Coating Mass on a Continuous Hot Dip Galvanizing Line, Master of Engineering Thesis, The University of Wollongong, 1978.

10 Salon, M. Effect of line speed and rig parameters on coating weight, Lysaght's internal report September 1972.

11 Edwards, W.J., Carlton, A.J., Harvey, G.F., Evans, R.F. & McKerrow, P.J. Coating Mass Control System Design for a Continuous Galvanizing Line, Automatica, Vol. 12, pp.225-235, 1976.

12 Everleigh, V. W. Adaptive Control and Optimisation Techniques, McGraw-Hill, 1967.

13 McKerrow, P.J. & Smith, A. K. Software System for Automatic Coating Mass Control on a Continuous Galvanizing Line. Conference on Computers in Engineering, Institution of Engineers, Australia, Perth 1976, p.115.